PHYSICS

BOOKS - NEET PREVIOUS YEAR (YEARWISE + CHAPTERWISE)

ELECTROSTATICS

Electrostatics

1. A capacitor is charged by a battery. The battery is removed and another identical

uncharged capacitor is connected in parallel. The total electrostatic energy of resulting system:

A. increases by a factor of 4

B. decreases by a factor of 2

C. remains the same

D. increases by a factor of 2

Answer: D

Watch Video Solution

2. Suppose the charge of a proton and an electron differ slightely. One of them is $-e$, the other is $(e+\Delta e)$. If the net of electrostatic force and gravitational force between two hydrogen atoms placed at a distance d (much greater than atomic size) apart is zero. Then Δe is of the order of [Given mass of hydrogen $m_h = 1.67 \times 10^{-27} kg$]

A. $10^{-20} C$

B. $10^{-23} C$

C. $10^{-37} C$

D. $10^{-47}C$

Answer: C

Watch Video Solution

3. A $2\mu F$ capacitor is charged as shown in the figure. The percentage of its stored energy disispated after the switch S is turned to

poistion 2 is

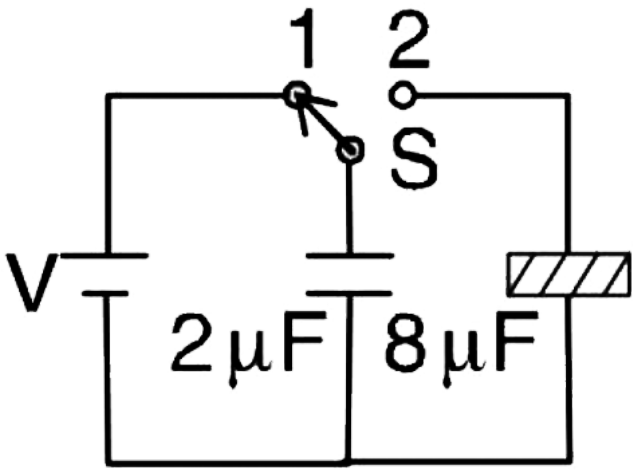

A. 20 %

B. 75 %

C. 80 %

D. 0 %

Answer: C

Watch Video Solution

4. A small signal voltage $V(t) = V_0 \sin \omega t$ is applied across an ideal capacitor C:

A. over a full cycle the capacitor C does not consume any energy from the voltage source

B. current I(t) is in phase with voltage $V(t)$

C. current I(t) leads voltage $V(t)$ by 180°

D. current I(t), lags voltage $V(t)$ by 90°

Answer: A

Watch Video Solution

5. An electric dipole is placed at an angle of 30° with an electric field intensity $2 \times 10^5 N/C$. It experiences a torque equal to $4Nm$. The charge on the dipole, if the dipole is length is $2cm$, is

A. 8mC

B. 2mC

C. 5mC

D. $7\mu C$

Answer: B

Watch Video Solution

6. A parallel -plate capacitor of area A, plate separation d and capacitance C is filled with four dielectric materials having dielectric constant k_1, k_2, k_3 and k_4 as shown in the figure below. If a single dielectric materical is

to be used to have the same capacitance C in this capacitor, then its dielectric constant k is given by

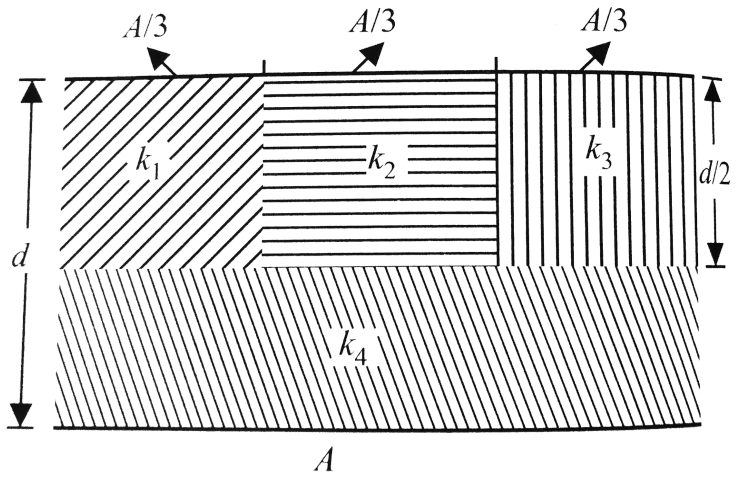

A. $k = k_1 + k_2 + k_3 + 3k_4$

B. $k = \frac{2}{3}(k_1 = k_2 + k_3) + 2k_4$

C. $\frac{2}{k} = \frac{3}{k_1 + k_2 + k_3} + \frac{1}{k_4}$

D. $\frac{1}{k} = \frac{1}{k_1} + \frac{1}{k_2} + \frac{1}{k_3} + \frac{3}{2k_4}$

Answer:

Watch Video Solution

7. A parallel plate air capacitor of capacitance C is connected to a cell of $emFV$ and then disconnected from it. A dielectric slab of dielectric constant K, which can just fill the air gap of the capacitor, is now inserted in it. Which of the following is incorrect ?

A. The potential difference between the plates decreases K times

B. The energy stored in the capacitor decreases K times

C. The change in energy stored is $\frac{1}{2}CV^2\left(\frac{1}{K}-1\right)$

D. The charge on the capacitor is not conserved

Answer: D

Watch Video Solution

8. The electric field in a certain region is acting radially outwards and is given by $E = Ar$. A charge contained in a sphere of radius $'a'$ centred at the origin of the field, will given by

A. $4\pi\varepsilon_0 Aa^2$

B. $A\varepsilon_0 a^2$

C. $4\pi\varepsilon_0 Aa^3$

D. $\varepsilon_0 Aa^3$

Answer: C

Watch Video Solution

9. In the given figure, a diode D is connected to an external resistance $R = 100\Omega$ and an emf of $3.5V$. If the barrier potential developed across the diode is $0.5V$, the current in the circuit will be :

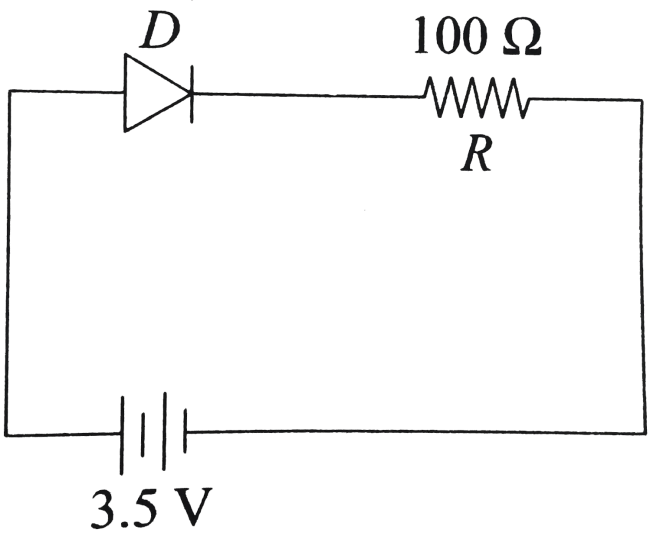

A. $30mA$

B. $40mA$

C. $20mA$

D. $35mA$

Answer: A

Watch Video Solution

10. If potential (in volts) in a region is expressed as $V(x, y, z) = 6xy - y + 2yz$, the electric field (in N/C) at point $(1, 1, 0)$ is

A. $-\left(3\hat{i}_5\hat{j}+3\hat{k}\right)$

B. $-\left(6\hat{i}+5\hat{j}+2\hat{k}\right)$

C. $-\left(2\hat{i}=3\hat{j}+\hat{j}k\right)$

D. $-\left(6\hat{i}+9\hat{j}+\hat{k}\right)$

Answer: B

Watch Video Solution

11. A parallel plate air capacitor has capcity C distance of separtion between plates is d and potential difference V is applied between the

plates force of attraction between the plates of the parallel plate air capacitor is

A. $\frac{C^2V^2}{2d}$

B. $\frac{CV^2}{2d}$

C. $\frac{CV^2}{d}$

D. $\frac{C^2V^2}{2d^2}$

Answer: B

Watch Video Solution

12. Two thin dielectric slabs of dielectric constants K_1 and $K_2(K_1 < K_2)$ are inserted between plates of a parallel plate capacitor, as shown in the figure. The variation of electric field E between the plates with distance d as

measured from plate P is correctly shown by

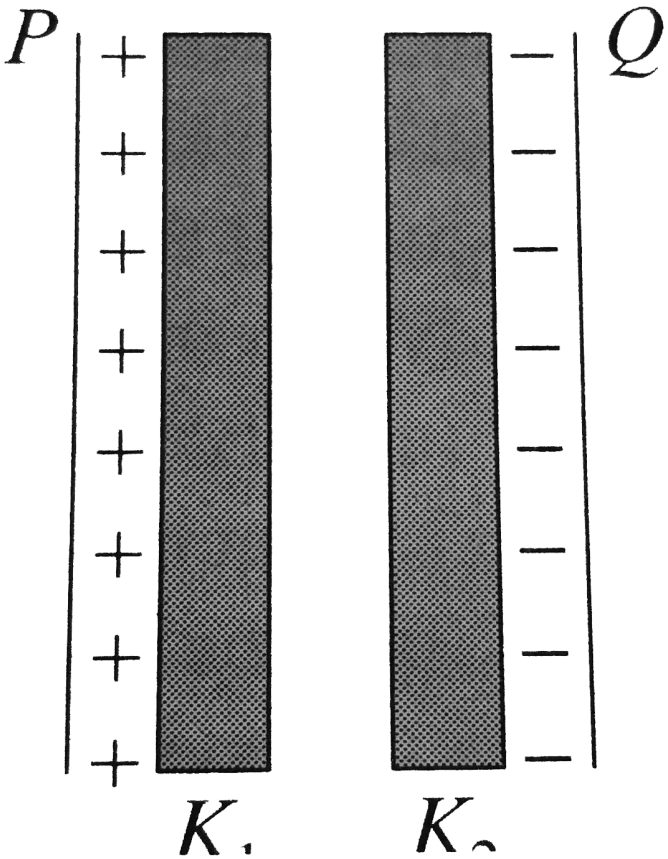

A. 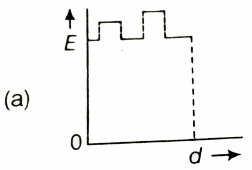

B. 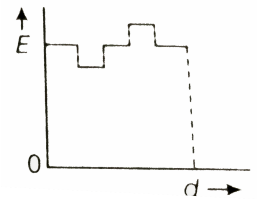

C. 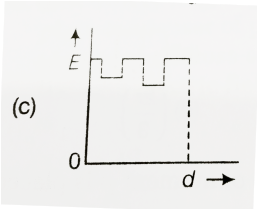

D. 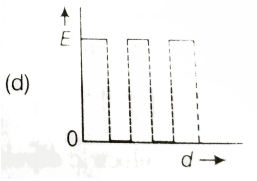

Answer: C

Watch Video Solution

13. A conducting sphere of radius R is given a charge Q. The electric potential and the electric field at the centre of the sphere respectively are

A. zero and $\frac{Q}{4\pi\varepsilon_0 R^2}$

B. $\frac{Q}{4\pi\varepsilon_0 R}$ and zero

C. $\frac{Q}{4\pi\varepsilon_0 R}$ and $\frac{Q}{4\pi\varepsilon_0 R^2}$

D. Both are zero

Answer: B

Watch Video Solution

Watch video solution

14. In a region, the potential is respresented by $V(x, y, z) = 6x - 8xy - 8y + 6yz$, where V is in volts and x, y, z are in meters. The electric force experienced by a charge of 2 coulomb situated at point $(1, 1, 1)$ is

A. $6\sqrt{5}N$

B. $30N$

C. $24N$

D. $4\sqrt{35}N$

Answer: D

Watch Video Solution

15. A, B and C are three points in a unifrom electric field. The electric potential is

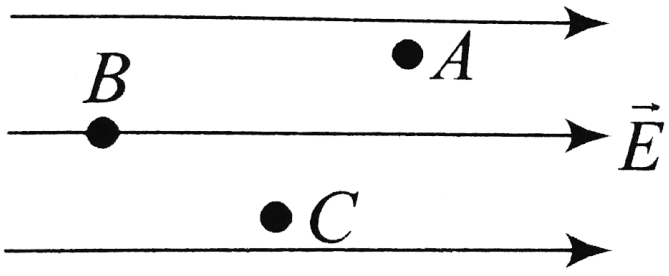

A. maximum at A

B. maximum at B

C. maximum at C

D. same at all the three points A,B and C

Answer: B

Watch Video Solution

16. Two path balls carrying equal charges are suspended from a common point by strings of equal length, the strings are rightly clamped at half the height. The equilibrium separation

between the balls, now becomes :

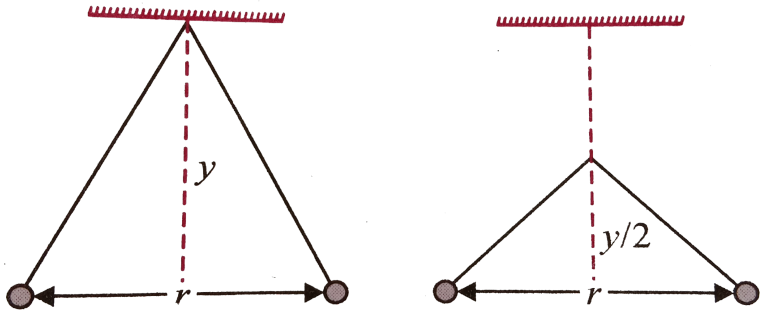

A. $\left(\frac{1}{\sqrt{2}}\right)^2$

B. $\frac{(r)}{\sqrt{2}}\Bigg)$

C. $\left(\frac{2r}{\sqrt{3}}\right)$

D. $\left(\frac{2r}{3}\right)$

Answer: B

Watch Video Solution

17. An electric dipole moment p is placed in an electric field of intensity $'E'$. The dipole acquires a position such that the axis of the dipole makes an angle θ with the direction of the field. Assuming that the potential energy of the dipole to be zero when $\theta = 90^\circ$, the torque and the potential energy of the dipole will respectively be

A. $pE\sin\theta, \ -pE\cos\theta$

B. $pE\sin\theta, 2pE\cos\theta$

C. $pE\sin\theta, 2pE\cos\theta$

D. $pE\cos\theta, \ -pE\sin\theta$

Answer: A

Watch Video Solution

18. Four point charges $-Q, \ -q, 2q$ and $2Q$ are placed, one at each corner of the square. The relation between Q and q for which the potential at the centre of the square is zero is

A. $Q = -q$

B. $Q = -\frac{1}{q}$

C. $Q = q$

D. $Q = \frac{1}{q}$

Answer: A

Watch Video Solution

19. What is the flux through a cube of side $'a'$ if a point charge of q is at one of its corner :

A. $\frac{2q}{\varepsilon_0}$

B. $\frac{q}{8\varepsilon_0}$

C. $\frac{q}{\varepsilon_0}$

D. $\frac{q}{2\varepsilon_0}6a^2$

Answer: B

Watch Video Solution

20. A parallel plate condenser has a unifrom electric field $E(V/m)$ in the space between the plates. If the distance between the plates

is $d(m)$ and area of each plate is $A(m^2)$ the energy (joule) stored in the condenser is

A. $\frac{1}{2}\varepsilon_0 E^2$

B. $\varepsilon_0 EAd$

C. $\frac{1}{2}\varepsilon_0 E^2$

D. $E^2 Ad/\varepsilon_0$

Answer: C

Watch Video Solution

21. A charge Q is enclosed by a Gaussian spherical surface of radius R. If the radius is doubled, then the outward electric flux will

A. be reduced to half

B. remain the same

C. be doubled

D. increases four times

Answer: B

Watch Video Solution

22. Four electric charges $+q$, $+q$, $-q$ and $-q$ are placed at the corners of a square of side 2L (see figure). The electric potential at point A, mid-way between the two charges $+q$ and $+q$, is

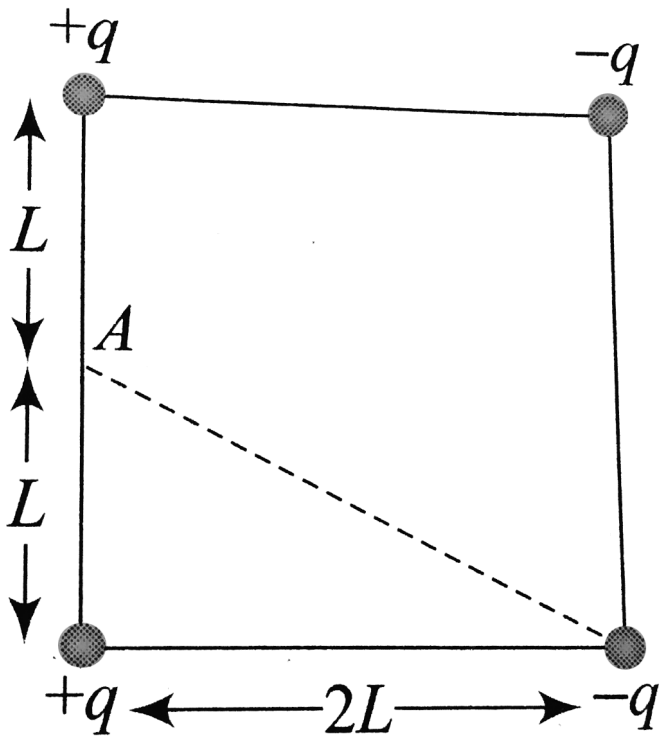

A. $\frac{1}{4\pi\varepsilon_0}\frac{2q}{L}\left(1+\frac{1}{\sqrt{5}}\right)$

B. $\frac{1}{4\pi\varepsilon_0}\frac{2q}{L}\left(1-\frac{1}{\sqrt{5}}\right.$

C. zero

D. $\frac{1}{4\pi\varepsilon_0}\frac{2q}{L}(1+\sqrt{5})$

Answer: B

Watch Video Solution

23. Two positive ions , each carrying a charge q , are separated by a distance d.If F is the force

of repulsion between the ions , the number of electrons missing from each ion will be (e being the charge on an electron)

A. $\frac{4\pi\varepsilon_0 F d^2}{e^2}$

B. $\sqrt{\frac{4\pi\varepsilon_0 F e^2}{d^2}}$

C. $\sqrt{\frac{4\pi\varepsilon_0 F d^2}{e^2}}$

D. $\frac{4\pi\varepsilon_0 F d^2}{q^2}$

Answer: C

Watch Video Solution

24. A square surface of side L metre in the plane of the paper is placed in a uniform electric field $E(\mathrm{volt}/m)$ acting along the same place at an anlge θ with the horizontal side of the square as shown in figure. The electric flux linked to the surface in uint of

$V - m$ is

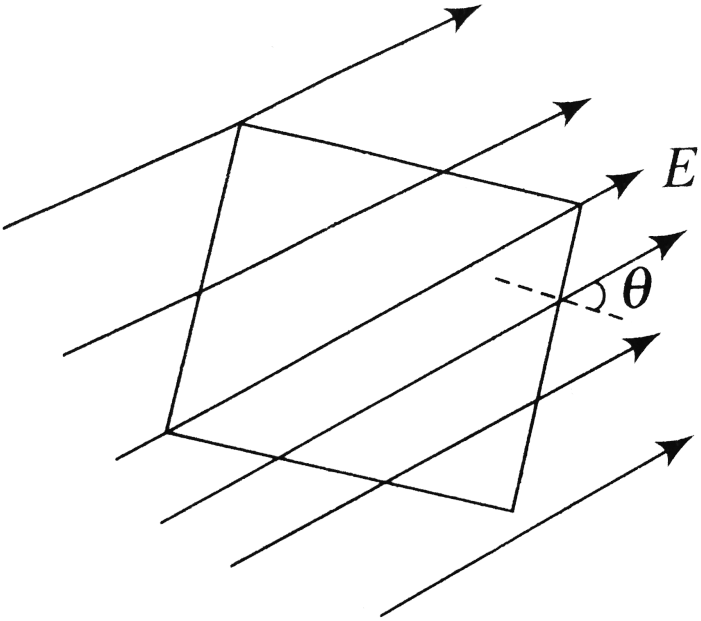

A. EL^2

B. $EL^2 \cos\theta$

C. $EL^2 \sin\theta$

D. 0

Answer: D

Watch Video Solution

25. A series combination of n_1 capacitors, each of value C_1, is charged by a source of potential difference $4V$. When another parallel combination of n_2 capacitors, each of value C_2, is charged by a source of potential difference V, it has same (total) energy stored in it, as the first combination has. the value of C_2, in terms of C_1, is then

A. $\frac{2C_1}{n_1 n_2}$

B. $16\frac{n_2}{n_1}C_1$

C. $2\frac{n_2}{n_1}C_1$

D. $\frac{16C_1}{n_1 n_2}$

Answer: D

Watch Video Solution

26. The electirc potential at a point (x, y, z) is given by

$$V = -x^2y - xz^3 + 4$$

The electric field $\vec{E}$ at that point is

A. $E = (2xy + z^3)\hat{i} + x^2\hat{j} + 3xz^2\hat{k}$

B.

$$E = 2xy\hat{i} + (x^2 + y^2)\hat{j} + (3xz - y^2)\hat{k}$$

C. $E = z^3\hat{i} + xyz\hat{j} + z^2\hat{k}$

D. $E = (2xy - z^3)hayi + xy^2\hat{j} + 3z^2 \times \hat{k}$

Answer: A

Watch Video Solution

27. Three capacitors each of capacitance C and of breakdown voltage V are joined in series. The capacitance and breakdown voltage of the combination will be

A. $\frac{C}{3}, \frac{V}{3}$

B. $3C, \frac{V}{3}$

C. $\frac{C}{3}, 3V$

D. $3C, 3V$

Answer: C

Watch Video Solution

28. Three concentric spherical shells have radii a, b and $c(a < b < c)$ and have surface charge densities $\sigma, -sigam$ and σ respectively. If V_A, V_B and V_C denote the potentials of the three shells, then for $c = q + b$, we have

A. $V_C = V_A \neq V_B$

B. $V_C = V_B \neq V_A$

C. $V_C \neq V_B \neq V_A$

D. $V_C = V_B = V_A$

Answer: D

Watch Video Solution

29. A thin conducting ring of radius R is given a charge $+Q$, Fig. The electric field at the center O of the ring due to the charge on the part AKB of the ring is E. The electric field at the center due to the charge on part $ACDB$

of the ring is

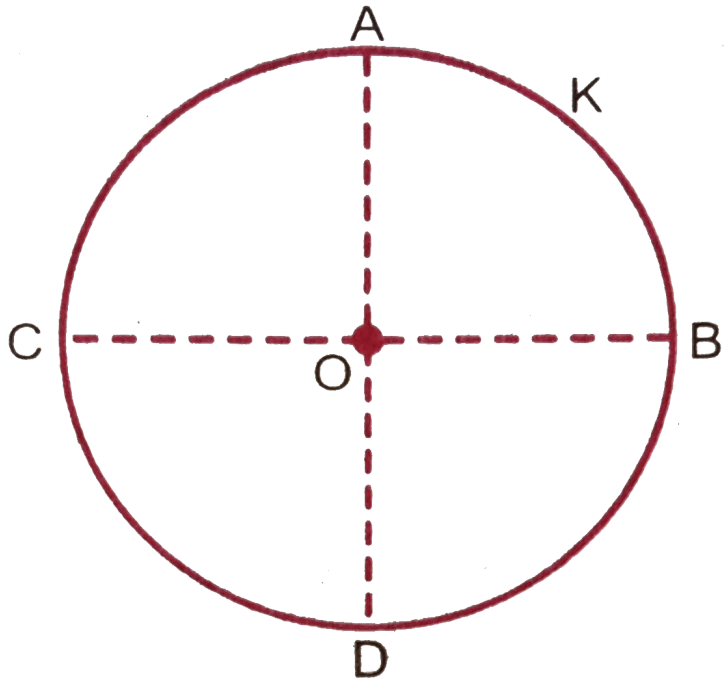

A. 3E along KO

B. E along OK

C. E along KO

D. 3E along OK

Answer: B

Watch Video Solution

30. The energy required to charge a parallel plate condenser of plate separtion d and plate area of cross-section A such that the unifom field between the plates is E is

A. $\frac{1}{2}\frac{\varepsilon_0 E^2}{Ad}$

B. $\frac{\varepsilon_0 E^2}{Ad}$

C. $\varepsilon_0 E^2 Ad$

D. $\frac{1}{2}\frac{\varepsilon_0 E^2}{Ad}$

Answer: C

Watch Video Solution

31. The electric potential at a point in free space due to a charge Q coulomb is $Q \times 10^{11}$ volts. The electric field at that point is

A. $4\pi\varepsilon_0 Q \times 10^{22} V/m$

B. $12\pi\varepsilon_0 Q \times 10^{20} V/m$

C. $4\pi\varepsilon_0 Q \times 10^{20} V/m$

D. $12\pi\varepsilon_0 Q \times 10^{22} V/m$

Answer: A

Watch Video Solution

32. Charges $+q$ and $-q$ are placed at points A and B respectively which are a distance $2L$ apart, C is the midpoint between A and B. The work done in moving a charge $+Q$ along

the semicircle CRD is

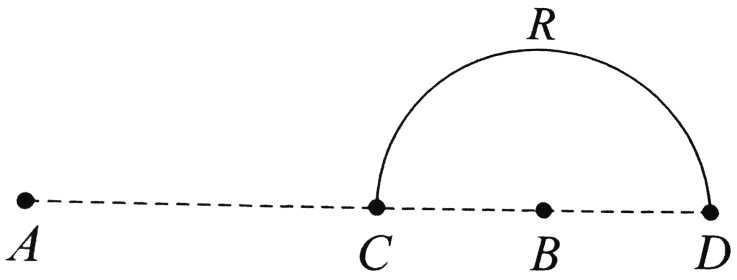

A. $\frac{qQ}{4\pi\varepsilon_0 L}$

B. $\frac{qQ}{2\pi\varepsilon_0 L}$

C. $\frac{qQ}{6\pi\varepsilon_0 L}$

D. $-\frac{qQ}{6\pi\varepsilon_0 L}$

Answer: D

Watch Video Solution

33. A hollow cylinder has a charge qC within it. If ϕ is the electric flux in unit of voltmeter associated with the curved surface B the flux linked with the plance surface A in unit of voltmeter will be

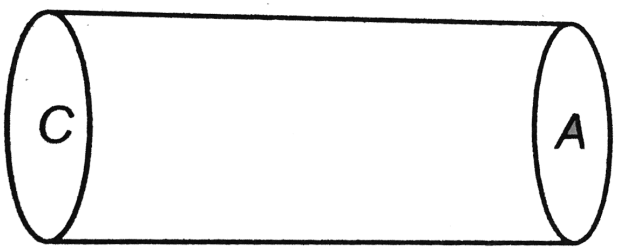

A. $\frac{1}{2}\left(\frac{q}{\varepsilon_0} - \phi\right)$

B. $\frac{q}{2\varepsilon_0}$

C. $\frac{\phi}{3}$

D. $\frac{q}{\varepsilon_0} - \phi$

Answer: A

Watch Video Solution

34. Two condensers, one of capacity C and the other of capacity $C/2$ are connected to a V volt battery, as shown.

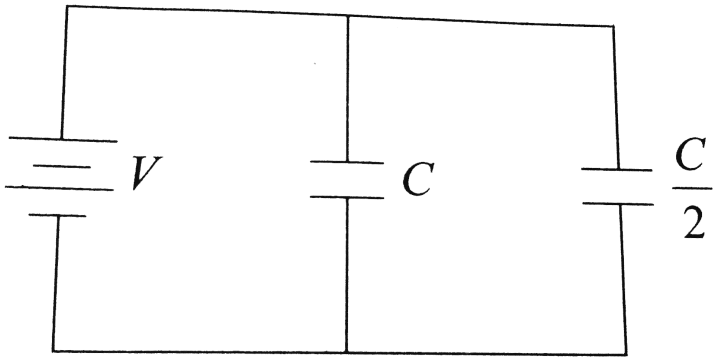

The work done in charging fully both the condensers is

A. $2CV^2$

B. $\frac{1}{4}CV^2$

C. $\frac{3}{4}CV^2$

D. $\frac{1}{2}CV^2$

Answer: C

Watch Video Solution

35. The point charges $+q$, $-2q$ and $+q$ are placed at point $(x=0, y=a, z=0), (x=0, y=0, z=0)$ and $(x=a, y=0, z=0)$, repectively. The magnitude and direction of the electric dipole moment vector of this charge assembly are

A. $\sqrt{2}qa$ along $+y$ direction

B. $\sqrt{2}aq$ along the line joining points

$(x = 0, y = 0, z = 0)$ and

$(x = a, y = a, z = 0)$

C. qa along the line joining points

$(x = 0, y = 0, z = 0)$ and

$(x = a, y = a, z = 0)$

D. $\sqrt{2}$ aq along $+x$ direction

Answer: B

Watch Video Solution

36. A square surface of side Lm is in the plane of the paper. A uniform electric field $\vec{E}\,(V/m)$, also in the plane of the paper, is limited only to the lower half of the square surface (see figure). The electric flux in SI units associated with the surface is:

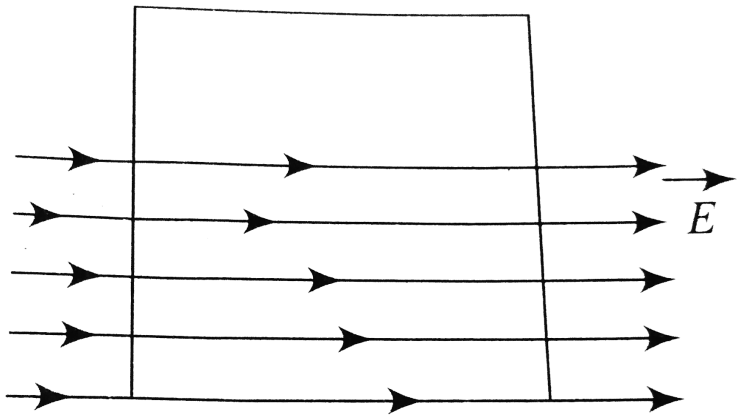

A. $\dfrac{EL^2}{(2\varepsilon_0)}$

B. $\frac{EL^2}{2}$

C. zero

D. EL^2

Answer: C

Watch Video Solution

37. A parallel plate air capacitor is charged to a potential difference of V volts. After disconnecting the charging battery the distance between the plates of the capacitor is

increased using an isulating handle. As a result the potential difference between the plates

A. decreases

B. does not change

C. becomes zero

D. increases

Answer: D

Watch Video Solution

38. An electric dipole of moment $\vec{P}$ is lying along a uniform electric field $\vec{E}$. The work done in rotating the dipole by 90° is:

A. $\sqrt{2}pE$

B. $\frac{pE}{2}$

C. $2pE$

D. pE

Answer: D

Watch Video Solution

39. Two charges q_1 and q_2 are placed $30cm$ apart, as shown in the figure. A third charge q_3 is moved along the arc of a circle of radius $40cm$ from C to D. The change in the potential energy o fthe system is $\frac{q_3}{4\pi\varepsilon_0}k.$, where k is

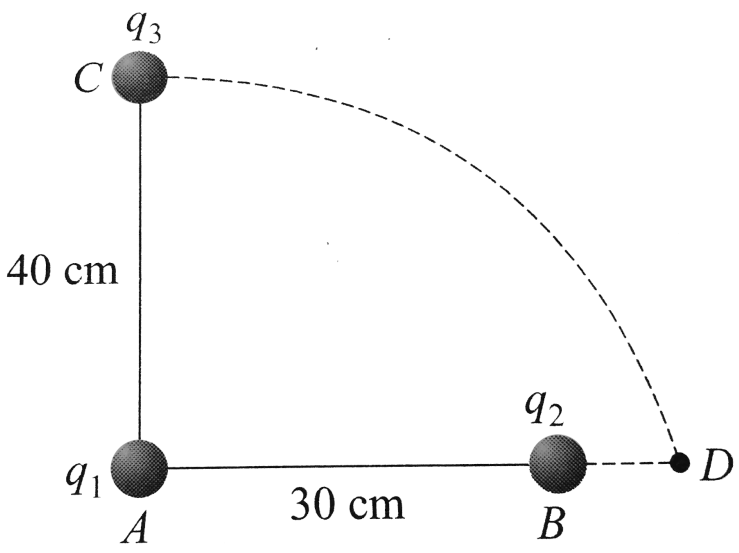

A. $8q_2$

B. $8q_1$

C. $6q_2$

D. $6q_1$

Answer: A

Watch Video Solution

40. As per this diagram a point charge $+q$ is placed at the origin O. Work done in taking another point charge $-Q$ from the point

$A(0, a)$ to another point $B(a, 0)$ along the staight path AB is:

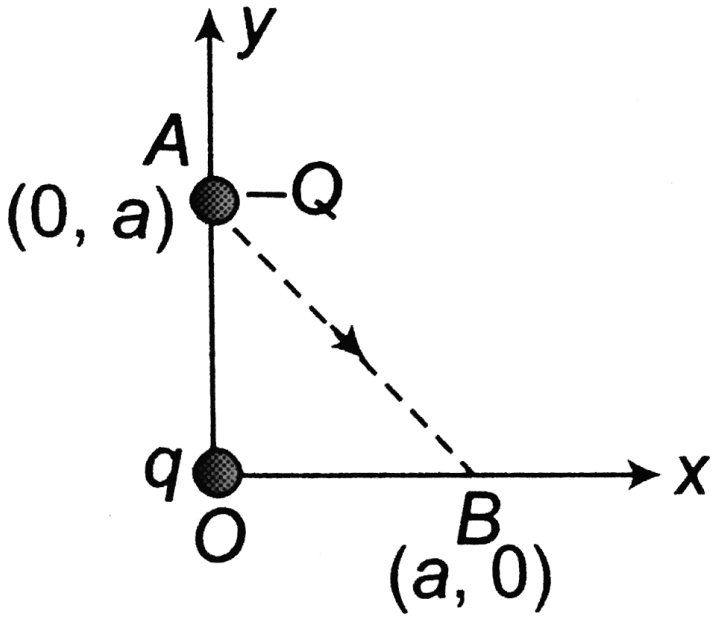

A. zero

B. $\left(\frac{-qQ}{4\pi\varepsilon_0}\frac{1}{a^2}\right)\sqrt{2}a$

C. $\left(\frac{qQ}{4\pi\varepsilon_0}\frac{1}{a^2}\right)\frac{a}{\sqrt{2}}$

D. $\left(\frac{qQ}{4\pi\varepsilon_0}\frac{1}{a^2}\right)\sqrt{2}a$

Answer: A

Watch Video Solution

41. A network of four capacitors of capacity equal to $C_1 = C, C_2 = 2C, C_3 = 3C$ and $C_4 = 4C$ are connected to a battery as shown in the figure. The ratio o fthe charges on C_2 an

C_4 is

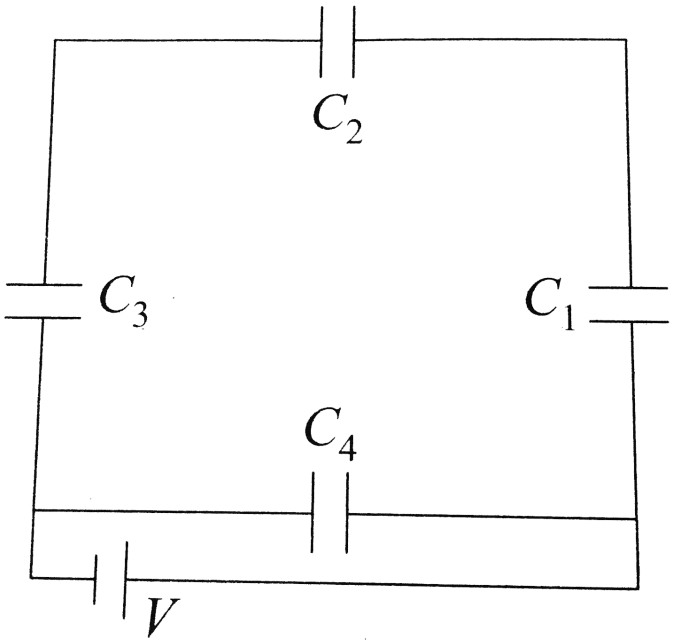

A. $\frac{22}{3}$

B. $\frac{3}{22}$

C. $\frac{7}{4}$

D. $\frac{4}{7}$

Answer: A

Watch Video Solution

42. A bullet of mass $2gm$ is having a charge of $2\mu c$. Through what potential difference must it be accelerated, starting from rest, to acquire a speed of $10m/s$

A. $5kV$

B. $50kV$

C. $5V$

D. $50V$

Answer: B

Watch Video Solution

43. An electric dipole has the magnitude of its charge as q and its dipole moment is p. It is placed in a uniform electric field E. If its dipole moment is along the direction of the field, the force on it and its potential energy are respectively

A. $2qE$ and minimum

B. qE and pE

C. zero and minimum

D. qE and maximum

Answer: C

Watch Video Solution

44. Three capacitors each of capacity $4\mu F$ are to be connected in such a way that the

effective capacitance is $6\mu F$. This can be done by

A. connecting two in series and one in parallel

B. connecting two in parallel and one in series

C. connecting all of them in series

D. connecting all of them in parallel

Answer: A

Watch Video Solution

45. A charge q is located at the centre of a cube. The electric flux through any face is

A. $\frac{\pi q}{6(4\pi\varepsilon_0)}$

B. $\frac{q}{6(4\pi\varepsilon_0)}$

C. $\frac{2\pi q}{6(4\pi\varepsilon_0)}$

D. $\frac{4\pi q}{6(4\pi\varepsilon_0)}$

Answer: D

Watch Video Solution

46. An electron is moving round the nucleus of a hydrogen atom in a circular orbit of radius r. The coulomb force $\vec{F}$ between the two is (where $k = \frac{1}{4\pi\varepsilon_0}$)

A. $k\frac{e^2}{r^3}r$

B. $-k\frac{e^2}{r^3}r$

C. $k\frac{e^2}{r^2}r$

D. $-k\frac{e^2}{r^3}\hat{r}$

Answer: B

Watch Video Solution

47. If identical charges $(-q)$ are placed at each corner of a cube of side b, then electric potential energy of charge $(+q)$ which is palced at centre of the cube will be

A. $-\dfrac{4\sqrt{2}q^2}{\pi\varepsilon_0}$

B. $\dfrac{8\sqrt{2}q^2}{\pi\varepsilon_0 b}$

C. $-\dfrac{4q^2}{\sqrt{3}\pi\varepsilon_0 b}$

D. $\dfrac{8\sqrt{2}q^2}{4\pi\varepsilon_0 b}$

Answer: C

Watch Video Solution

48. A capacity of capacity C_1 is charged up to V volt and then connected to an uncharged capacitor of capacity C_2. Then final potential difference across each will be

A. $\frac{C_2 V}{C_1 + C_2}$

B. $\frac{C_1 V}{C_1 + C_2}$

C. $\left(1 + \frac{C_2}{C_1}\right) V$

D. $\left(1-\frac{C_2}{C_1}\right)V$

Answer: B

Watch Video Solution

49. Some charge is being given to a conductor.

Then its potential : -

A. maximum at surface

B. maximum at centre

C. same throughout the conductor

D. maximum somewhere between surface and centre

Answer: C

Watch Video Solution

50. A charge $q\mu C$ is placed at the centre of a cube of a side $0.1m$, then the electric flux diverging from each face of the cube is

A. $\frac{q \times 10^{-6}}{24\varepsilon_0}$

B. $\frac{q \times 10^{-4}}{\varepsilon_0}$

C. $\frac{q \times 10^{-6}}{6\varepsilon_0}$

D. $\frac{q \times 10^{-4}}{12\varepsilon_0}$

Answer: C

Watch Video Solution

51. In a parallel plate capacitor, the distance between the plates is d and potential difference across the plate is V. Energy stored

per unit volume between the plates of capacitor is

A. $\frac{Q^2}{2V^2}$

B. $\frac{1}{2}\frac{\varepsilon_0 V^2}{d^2}$

C. $\frac{1}{2}\frac{V^2}{\varepsilon_0 d^2}$

D. $\frac{1}{2}\varepsilon_0\frac{V^2}{d}$

Answer: B

Watch Video Solution

52. A charge q is placed at the centre of a cube of side l what is the electric flux passing through two opposite faces of the cube ?

A. $\frac{q}{\varepsilon_0}$

B. $\frac{q}{3\varepsilon_0}$

C. $\frac{q}{6\varepsilon_0}$

D. $\frac{q}{8\varepsilon_0}$

Answer: D

Watch Video Solution

53. A charged wire is bent in the form of a semicircular arc of radius a. If charge per unit length is λ coulomb/metre, the electric field at the centre O is

A. $\frac{\lambda}{2\pi a^2 \varepsilon_0}$

B. $\frac{\lambda}{4\pi^2 \varepsilon_0 a}$

C. $\frac{\lambda}{2\pi \varepsilon_0 a}$

D. zero

Answer: C

View Text Solution

54. A capacitor is charged by connecting a battery across its plates. It stores energy U. Now the battery is disconnected and another identical capacior is connected across it, then the energy stores by both capacitors of the system will be

A. U

B. $\frac{U}{2}$

C. $2U$

D. $\frac{3}{2}U$

Answer: B

Watch Video Solution

55. The effective capacitance between points and Y of figure shown is

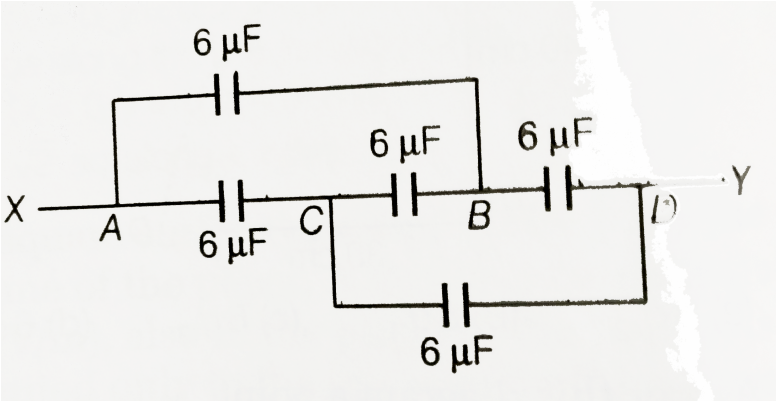

A. $6\mu F$

B. $12\mu F$

C. $18\mu F$

D. $24\mu F$

Answer: A

Watch Video Solution

56. A parallel plate condenser with oil (dielectric constant 2) between the plates has

capacitance C. If oil is removed, the capacitance of capacitor becomes

A. $\sqrt{2}C$

B. $2c$

C. $\frac{C}{\sqrt{2}}$

D. $\frac{C}{2}$

Answer: D

Watch Video Solution

57. In bringing an electron towards another electron, the electrostatic potential energy of the system

A. decreases

B. increases

C. remains same

D. becomes zero

Answer: B

Watch Video Solution

58. When air is replaced by a dielectric medium of constant K, the maximum force separated by a distance

A. decreases K times

B. increases K times

C. remains unchanged

D. becomes $\frac{1}{K^2}$ times

Answer: A

Watch Video Solution

59. A hollow insulated conducting sphere is given a positive charge of $10\mu C$. What will be the electric field at the centre of the sphere it is radius is 2 metres ?

A. Zero

B. $55\mu Cm^{-2}$

C. $20\mu Cm^{-2}$

D. $8\mu Cm^{-2}$

Answer: A

Watch Video Solution

60. A particle of mass m and charge q is released from rest in uniform electric field of intensity E. Calculate the kinetic energy it attains after moving a distance x between the plates.

A. qEy^2

B. qE^2y

C. qEy

D. q^2Ey

Answer: C

Watch Video Solution

61. A point Q lies on the perpendicular bisector of an electrical dipole of dipole moment p, If the distance of Q from the dipole is r (much larger than the size of the dipole), then electric field at Q is proportional to

A. p^{-1} and r^2

B. p and r^{-2}

C. p^2 and r^{-3}

D. p and r^{-3}

Answer: D

Watch Video Solution

62. The formation of a dipole is due to two equal and dissimilar point charges placed at a

A. short distance

B. long distance

C. above each other

D. None of these

Answer: A

Watch Video Solution

63. Intensity of an electric field (E) depends on distance r due to a dipole, is related as

A. $E \propto \frac{1}{r}$

B. $E \propto \frac{1}{r^2}$

C. $E \propto \frac{1}{r^3}$

D. $E \propto \frac{1}{r^4}$

Answer: C

Watch Video Solution

64. A charge q is placed at the centre of a cube of side l what is the electric flux passing through two opposite faces of the cube ?

A. $\frac{q}{\varepsilon_0}$

B. $\frac{6qL^2}{\varepsilon_0}$

C. $\frac{q}{6L^2\varepsilon_0}$

D. zero

Answer: A

Watch Video Solution

65. There is an electric field E in x-direction. If the work done on moving a charge of $0.2C$ through a distance of 2w m along a line

making a angle 60° with x-axis is 4 J, then what is the value of E?

A. $3N/C$

B. $4N/C$

C. $5N/C$

D. $20N/C$

Answer: D

Watch Video Solution

66. A charge q is placed at the centre of the line joining two equal charges Q. The system of the three charges will be in equilibrium if q is equal to:

A. $-\frac{Q}{4}$

B. $+Q$

C. $-Q$

D. $\frac{Q}{2}$

Answer: A

Watch Video Solution

Watch Video Solution

67. If the potential of a capacitor having capacity of $6\mu F$ is increased from 10 V to 20 V,then increase in its energy will be

A. $4 \times 10^{-4} J$

B. $4 \times 10^{-14} J$

C. $9 \times 10^{-4} J$

D. $12 \times 10^{-6} J$

Answer: C

Watch Video Solution

68. An electric dipole consisting of two opposite charges of $2 \times 10^{-6} C$ each separated by a distance of $3cm$ is placed in an electirc field of $2 \times 10^{5} N/C$. The maximum torque on the dipole is will be

A. $12 \times 10^{-1} N - m$

B. $12 \times 10^{-2} N - m$

C. $12 \times 10^{-3} N - m$

D. $12 \times 10^{-4} N - m$

Answer: C

Watch Video Solution

69. The four capacitors, each of $25\mu F$ are connected as shown in figure. The DC voltmeter reads 200V. The charge on each

plate of capacitor is

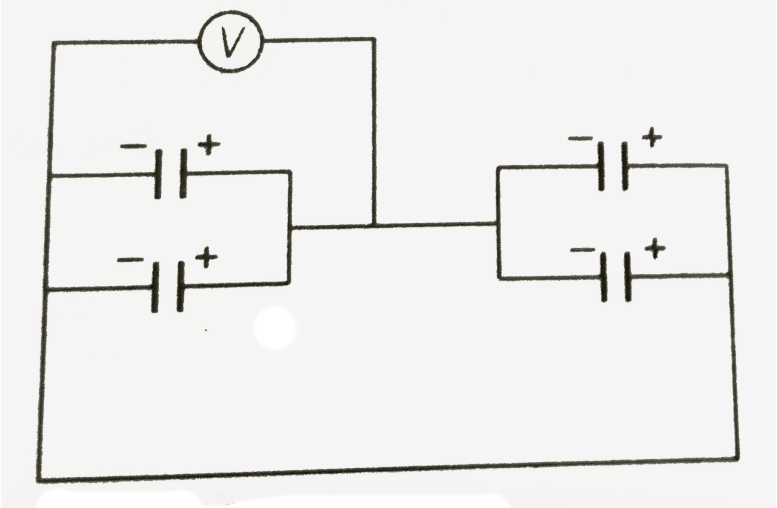

A. $\pm 2 \times 10^{-3} C$

B. $\pm 5 \times 10^{-3} C$

C. $\pm 2 \times 10^{-2} C$

D. $\pm 5 \times 10^{-2} C$

Answer: B

Watch Video Solution

70. A hollow metal sphere of radius 10cm is charged such that the potential on its surface is 80 V. The potential at the centre of the sphere is

A. zero

B. $80V$

C. $800V$

D. $8V$

Answer: B

Watch Video Solution

71. The electric field strength in air at NTP is $3 \times 10^6 V/m$. The maximum charge that can be given to a spherical conductor of radius 3m is

A. $3 \times 10^4 C$

B. $3 \times 10^{-3} C$

C. $3 \times 10^{-2} C$

D. $3 \times 10^{-1} C$

Answer: B

Watch Video Solution

72. Two spherical conductors A and B of radii 1mm and 2mm are separated by a distance of 5 cm and are uniformly charged. If the spheres are connected by a conducting wire then in equilibrium condition, the ratio of the

magnitude of the electric fields at the surfaces of spheres A and B is

A. $4:1$

B. $1:2$

C. $2:1$

D. $1:4$

Answer: A

Watch Video Solution

73. Two connectric spheres of radii R and r have similar charges with equal surface charge densities $(sigam)$. The electric potential at their common centre is

A. $\frac{\sigma}{\varepsilon_0}$

B. $\frac{\sigma}{\varepsilon_0}(R-r)$

C. $\frac{\sigma}{\varepsilon_0}(R+r)$

D. None of these

Answer: C

Watch Video Solution

Watch video solution

74. A pendulum bob of mass $30.7 \times 10^{-6} kg$ and carrying a chargee $2 \times 10^{-8} C$ is at rest in a horizontal uniform electric field of $20000 V/m$. The tension in the thread of the pendulum is $(g = 9.8 m/s^2)$

A. $3 \times 10^4 N$

B. $4 \times 10^{-4} N$

C. $5 \times 10^{-4} N$

D. $6 \times 10^{-4} N$

Answer: C

Watch Video Solution

75. A $4\mu F$ capacitor is charged to 400 volts and then its plates are joined through a resistor of resistance $1K\Omega$. The heat produced in the resistor is

A. $0.16J$

B. $1.28J$

C. $0.64J$

D. $0.32J$

Answer: D

Watch Video Solution

76. Point charges $+4q, \ -q$ are kept on the x-axis at points $x = 0, x = a$ and $X = 2a$ respectively, then

A. only $-q$ is in stable equilibrium

B. None of the charge is in equilibrium

C. all the charges are in unstable equilibrium

D. all the charges are in stable equilibrium

Answer: C

Watch Video Solution