PHYSICS

BOOKS - NEET PREVIOUS YEAR (YEARWISE + CHAPTERWISE)

RE-NEET 2020

Others

1. The E.M. wave with shortest wavelength among following is

A. $\underline{t}travio \leq trays$

B. $xrays$

C. $\gamma rays$

D. $microwaves$

Answer: C

Watch Video Solution

2. The angular speed of the wheel of a vehicle is increased from 360 rpm to 1200 rpm in 14 second Its angular acceleration is

A. $2\pi ra\frac{d}{s^2}$

B. $28\pi ra\frac{d}{s^2}$

C. $120\pi ra\frac{d}{s^2}$

D. $1ra\frac{d}{s^2}$

Answer: A

Watch Video Solution

3. What happens to the mass number and atomic number of an element when it emits y-radiation

A. mass number decreases by four and atomic number decreases by two

B. mass number and atomic number remain unchanged

C. mass numberremains unchanged while atomic number decreases by one

D. mass number increases by four and atomic number increases by two

Answer: B

Watch Video Solution

4. The angle of 1' (minute of arc) in radian is nearly equal to

A. $2.91x10^{-4}rad$

B. $4.85x10^{-4}rad$

C. $4.80x10^{-6}rad$

D. $1.75x10^{-2}rad$

Answer: A

Watch Video Solution

5. The magnetic flux linked with a coil (in Wb) is given by the equation $\phi = 5t^2 + 3t + 16$. The magnetic of induced emf in the coil at fourth second will be

A. 33V

B. 43V

C. 108V

D. 10V

Answer: B

Watch Video Solution

6. The electric field at a point on the equatorial plane at a distance r from the centre of a dipole having dipole moment $\overrightarrow{t}\,p$ is given by (r >> seperation of two charges forming dipole , ε_0 = permittivity of free space

A. $\overrightarrow{E} = \frac{\overrightarrow{P}}{4}\pi\varepsilon_0 r^3$

B. $\overrightarrow{E} = 2\frac{\overrightarrow{P}}{4}\pi\varepsilon_0 r^3$

C. $\overrightarrow{E} = -\frac{\overrightarrow{P}}{4}\pi\varepsilon_0 r^2$

D. $\overrightarrow{E} = -\frac{\overrightarrow{P}}{4}\pi\varepsilon_0 r^3$

Answer: D

Watch Video Solution

7. A plano convex lens of unknown material and unknown focal length is given. With the help of a spherometer we can measure the

A. focal length of lens

B. radius of curvature of curved surface

C. aperture of lens

D. refractive index of material

Answer: B

Watch Video Solution

8. A light bulb and an inductor coil are connected to an ac source through a key as shown in figure below. The key is closed and after sometime an iron rod is inserted into

interior of inductor. The glow of light bulb

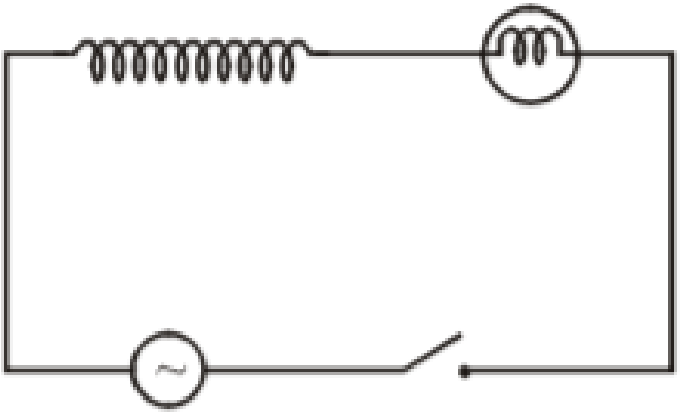

A. decreases

B. remains unchanged

C. will fluctuate

D. increases

Answer: A

Watch Video Solution

9. The efficiency of carnot engine depends on

A. temperature of sink only

B. temperature of source and sink

C. volume of cylinder of engine

D. temperature of source

Answer: B

Watch Video Solution

10. Out of following which one is a forward biased diode

A. 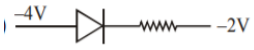

B. 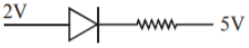

C. 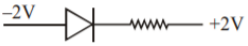

D. 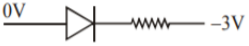

Answer: D

Watch Video Solution

11. For the circuit shown in the figure current I

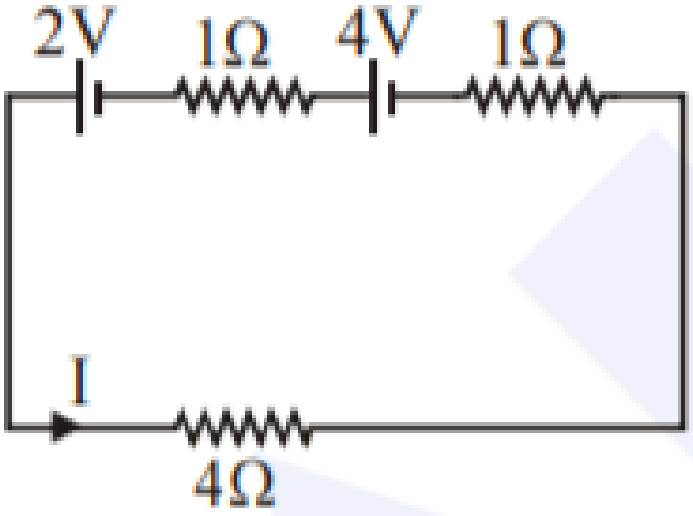

will be

A. 0.75A

B. 1A

C. 1.5A

D. 0.5A

Answer: B

Watch Video Solution

12. Two coherent sources of light interfere and produce fringe pattern on a screen . For central maximum phase difference between two waves will be

A. zero

B. π

C. $3\frac{\pi}{2}$

D. $\frac{\pi}{2}$

Answer: A

Watch Video Solution

13. Total energy of an electron in nth stationary orcit of hydrogen atom can be obtained by

A. $E_n = \frac{13.6}{n^2} eV$

B. $E_n = -\frac{13.6}{n^2} eV$

C. $E_n = -\frac{13.6}{n^2} eV$

D. $E_n = 13.6 x n^2 eV$

Answer: B

Watch Video Solution

14. Identify function which represent periodic motion

A. $e^{\omega t}$

B. $\log_e(\omega t)$

C. $\sin(\omega t) + \cos(\omega t)$

D. $e^{-\omega t}$

Answer: C

Watch Video Solution

15. The de broglie wavelength of electron moving with kinetic energy of 144 eV is nearly

A. $102x10^{-3}nm$

B. $102x10^{-4}nm$

C. $102x10^{-5}nm$

D. $102x10^{-2}nm$

Answer: A

Watch Video Solution

16. The mean free path l for a gas molecule depends upon diameter d of molecule as

A. $l \propto \quad \text{or} \quad tional \rightarrow \frac{1}{d^2}$

B. $l \propto \quad \text{or} \quad tional \rightarrow d$

C. $l \propto \quad \text{or} \quad tional \rightarrow d^2$

D. $l \propto \quad \text{or} \quad tional \rightarrow \frac{1}{d}$

Answer: A

Watch Video Solution

17. A npn transistor is connectedin CEC in which collector voltage drop across load resistance (800 ohm) connected to collector

circuit is 0.8V The collector current is

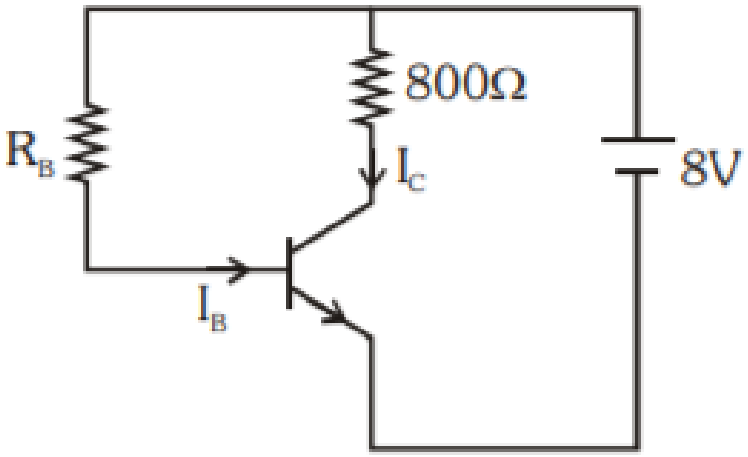

A. 2 mA

B. 0.1 mA

C. 1 mA

D. 0.2 mA

Answer: C

Watch Video Solution

18. A person sitting in the ground floor of a building notices through window of height 1.5 m a ball dropped from roof of building crosses window in 0.1s what is velocity of ball when it is at the tomost point of window

A. $15.5\frac{m}{s}$

B. $14.5\frac{m}{s}$

C. $4.5\frac{m}{s}$

D. $20\frac{m}{s}$

Answer: B

Watch Video Solution

19. The magnetic field in a plane em wave is given by `B_y = 2 x 10 ^(-7) sin (pi x 10^3 x + 3 pi x 10^11 t)T Calculate the wavelength

A. $\pi x 10^3$

B. $2x10^{-3}m$

C. $2x10^3 m$

D. $\pi x10^{-3} m$

Answer: B

Watch Video Solution

20. The length of string of a musical instrument is 90 cm and has fundamental frequency of 120 Hz where should it be pressed to produce fundamental frequency of 180 Hz

A. 75 cm

B. 60 cm

C. 45 cm

D. 80 cm

Answer: B

Watch Video Solution

21. The acceleration of electron due to mutual attraction between electron and a proton when they are 1.6 Angstroms apart is

A. $10^{24}\frac{m}{s^2}$

B. $10^{23}\frac{m}{s^2}$

C. $10^{22}\frac{m}{s^2}$

D. $10^{25}\frac{m}{s^2}$

Answer: C

Watch Video Solution

22. Wave nature of electrons was experimentally verified by

A. de broglie

B. hertz

C. einstein

D. davisson and germer

Answer: D

Watch Video Solution

23. Two solid conductors are made up of same material have same length and same resistance . One of them has circular

crosssection of area A_1 and other one has square cross section of area A_2. RATIO $\frac{A_1}{A_2}$

A. 1.5

B. 1

C. 0.8

D. 2

Answer: B

Watch Video Solution

24. For circuit given the kirchoff's loop rule for loop BCDEB is given by equation

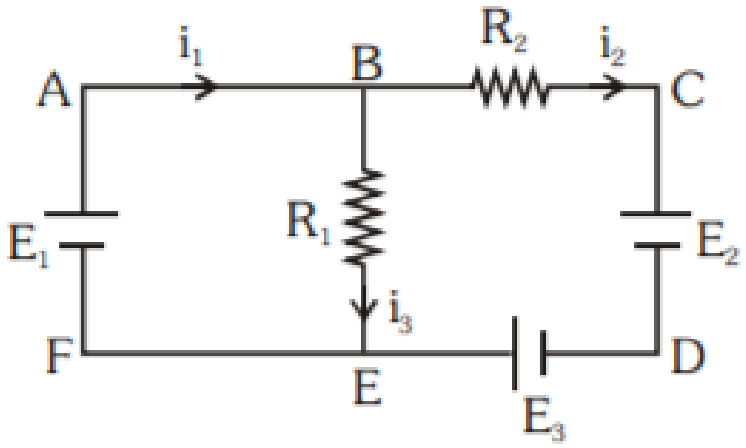

A. $-i_2R_2 + E_2 - E_3 + i_3R_1 = 0$

B. $i_2R_2 + E_2 - E_3 - i_3R_1 = 0$

C. $i_2R_2 + E_2 + E_3 + i_3R_1 = 0$

D. $-i_2R_2 + E_2 - E_3 + i_3R_1 = 0$

Answer: B

Watch Video Solution

25. Three stars A,B,C have surface temperature T_A, T_B, T_C resp. Star A appears bluish star B appears reddish and star C yellowish . Hence

A. $T_A > T_B > T_C$

B. $T_B > T_C > T_A$

C. $T_C > T_B > T_A$

D. $T_A > T_C > T_B$

Answer: D

Watch Video Solution

26. A liquid does not wet solid surface if angle of contact is

A. equal to 45 deg

B. equal to 60

C. greater than 90

D. zero

Answer: C

Watch Video Solution

27. A point mass m is moved in vertical circle of radius r with help of string. Velocity of mass is $\sqrt{7gr}$ at lowest point. Tension in string at lowest point is

A. 6 mg

B. 7 mg

C. 8 mg

D. 1 mg

Answer: C

Watch Video Solution

28. An object is placed on principal axis of concave mirror at distance of 1.5 f Image will be at

A. -3f

B. 1.5f

C. -1.5f

D. 3f

Answer: A

Watch Video Solution

29. Half life of radioactive sample undergoing alpha decayis 1.4 x 10^17s. If number of nuclei in sample is 2.0 x 10^21 activity of sample is nearly

A. $10^4 Bq$

B. $10^5 Bq$

C. $10^6 Bq$

D. 10^3Bq`

Answer: A

Watch Video Solution

30. If critical angle for TIR from medium to vacuum is 45 deg then velocity of light in medium

A. $1.5x10^8 \frac{m}{s}$

B. $\frac{3}{\sqrt[2]{x}} 10^8 \frac{m}{s}$

C. $\sqrt[2]{x} 10^8 \frac{m}{s}$

D. $3x10^8 \frac{m}{s}$

Answer: B

Watch Video Solution

31. A wheel with 20 metallic spokes each 1m long is rotated with a speed of 120 rpm in a plane perpendicular to magnetic field of 0.4G.

The induced emf between axle and rim of wheel will be

A. $2.51x10^{-4}V$

B. 2.51 x 10^-5 V`

C. $4x10^{-5}V$

D. $2.51v$

Answer: A

Watch Video Solution

32. An ideal gas equation can be written as $P = \rho R \frac{T}{M_0}$ where ρ and M are resp.

A. mass density, mass of gas

B. number density, molar mass

C. mass density, molar mass

D. number density, mass of gas

Answer: C

Watch Video Solution

33. The variation of electrostatic potential with radial distance r from centre of positively charged metallic thin shell of radius R is given by graph

A. 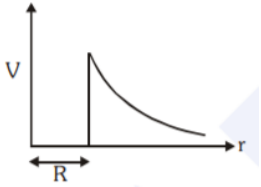

B. $\#\#N\exists T_R E_{20}\_PHY_{33}\_O02\#\#$

C. $\#\#N\exists T_R E_{20}\_PHY_{33}\_O03\#\#$

D. $\#\#N\exists T_R E_{20}\_PHY_{33}\_O04\#\#$

Answer: B

Watch Video Solution

34. Which of the following gate is called universal gate

A. OR

B. AND

C. NAND

D. NOT

Answer: C

Watch Video Solution

35. PV Diagram for ideal gas in piston cylinder assembly undergoing a thermodynamic process is shown in figure. Process is

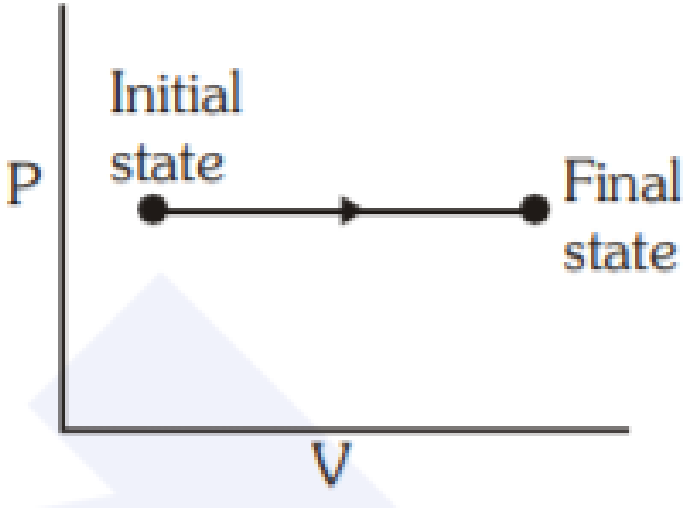

A. adiabatic

B. isochoric

C. isobaric

D. iso thermal

Answer: C

Watch Video Solution

36. Power of biconvex lens is 10 diopters and radius of curvature of each surface is 10cm.Then refractive index of material of lens is

A. 43924

B. 44082

C. 43954

D. 43892

Answer: D

Watch Video Solution

37. Intrinsic semiconductor is converted into ntype extrinsic semiconductor by doping it with

A. phosphorous

B. aluminium

C. silver

D. germanium

Answer: A

Watch Video Solution

38. Barometer is constructed using liquid . What would be height of liquid column when mercury barometer reads 76cm

A. 1.36 m

B. 13.6 m

C. 136 m

D. 0.76 m

Answer: B

Watch Video Solution

39. A wire of length l meter carrying current i ampere is bent in form of circle. Magnetic moment is

A. $I\frac{L^2}{4}Am^2$

B. $I\pi\frac{L^2}{4}Am^2$

C. $2I\frac{L^2}{\pi}Am^2$

D. $I\frac{L^2}{4}\pi Am^2$

Answer: D

Watch Video Solution

40. A paralel plate capacitor having cross sectional area A and seperation d has air in between plates. Now an insulating slab of

same area but thickness d/2 is inserted between plates having dielectric constant k =4. Ratio of new capacitance to its original capacitance will be

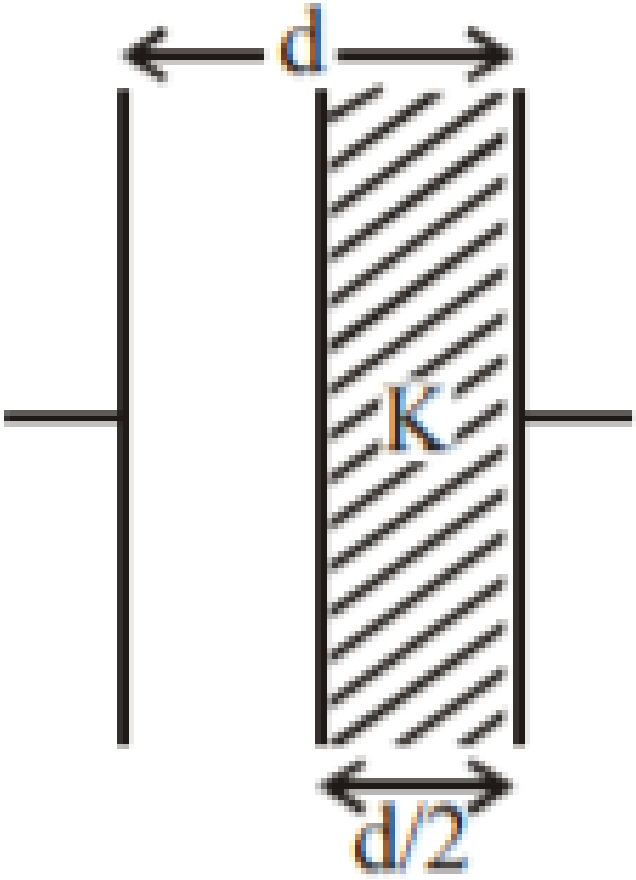

A. 0.084027777777778

B. 0.33680555555556

C. 0.25347222222222

D. 0.16736111111111

Answer: B

Watch Video Solution

41. What is depth at which value of acceleration due to gravity becomes 1/n times value that at surface of earth

A. R/n^2

B. R(n-1)/n

C. Rn(n-1)

D. R/n

Answer: B

Watch Video Solution

42. Time intervals measured by clock give following readings: 1.25s, 1.24s, 1.27s, 1.21s and

1.28s. What is percentage relative error of observations?

A. 0.02

B. 0.04

C. 0.16

D. 0.016

Answer: D

Watch Video Solution

43. Three identical spheres each of mass M are placed at corners of right angle triangle with mutually perpendicular sides equal to 2m. Taking point of intersection of two mutually perpendicular sides as origin find position vector center of mass

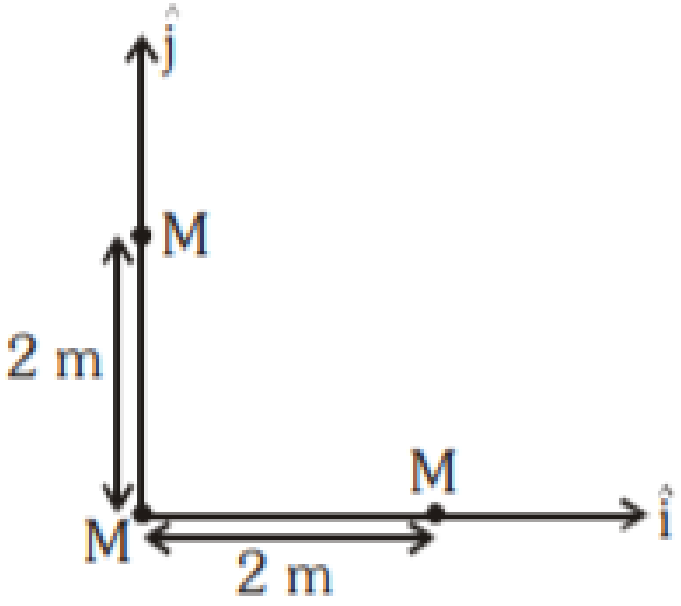

A. $2\left(\hat{i}+\hat{j}\right)$

B. $\left(\hat{i}+\hat{j}\right)$

C. $2\frac{\hat{i}+\hat{j}}{3}$

D. $4\frac{\hat{i}+\hat{j}}{3}$

Answer: C

Watch Video Solution

44. Equivalent resistance between A and B for

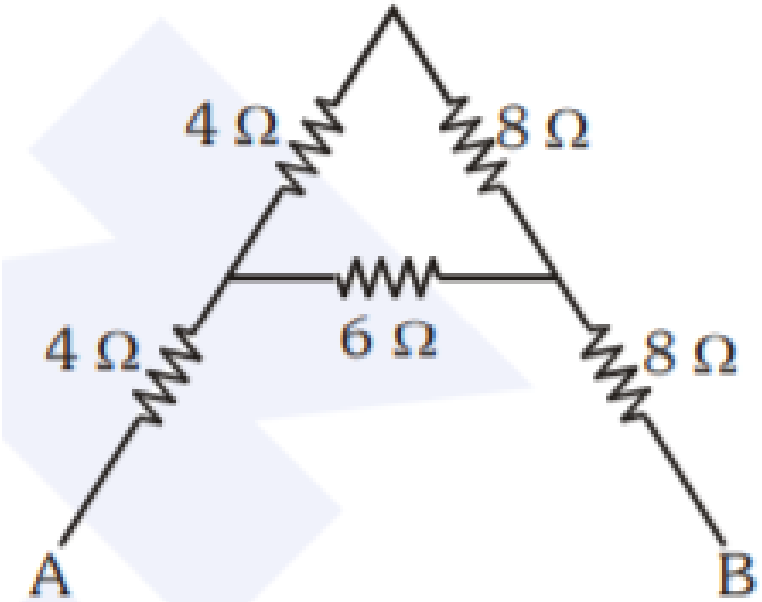

mesh is

A. 7.2 ohm

B. 16 ohm

C. 30 ohm

D. 4.8 ohm

Answer: B

Watch Video Solution

45. Calculate acceleration of block and trolly system shown in figure. Coefficient of kinetic friction between trolly and the surface is 0.05, mass of string is negligible and no other

friction exists

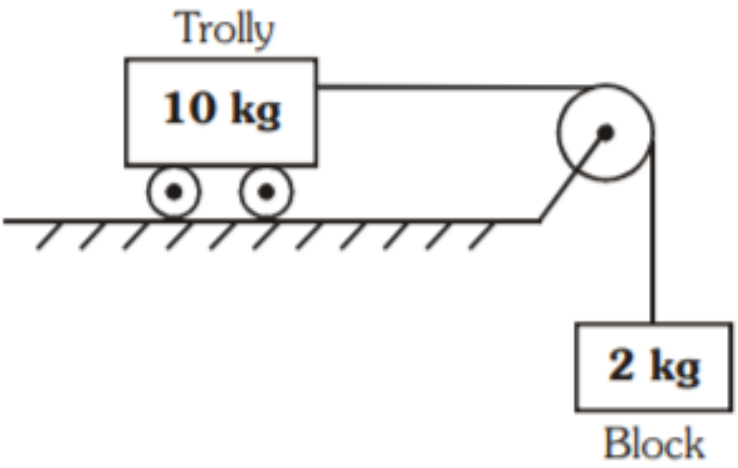

A. 1.25 m/s^2

B. 1.5 m/s^2

C. 1.66 m/s^2

D. 1.00 m/s^2

Answer: A

Watch Video Solution