PHYSICS

BOOKS - CENGAGE PHYSICS (HINGLISH)

RAY OPTICS

Dpp 1 1

1. For a concave mirrorr, if real image is formed the graph between $\frac{1}{u}$ and $\frac{1}{v}$ is of the form

A.

B.

C.

D.

Answer: A

Watch Video Solution

2. In an experiment to find focal length of a concave mirror, a graph is drawn between the magnitudes of (u) and (v). The graph looks like.

A.

B.

C.

D.

Answer: C

Watch Video Solution

3. The graph shows variation of v with change in u for a mirrorr. Points plotted above the point P on the curve are for values of v

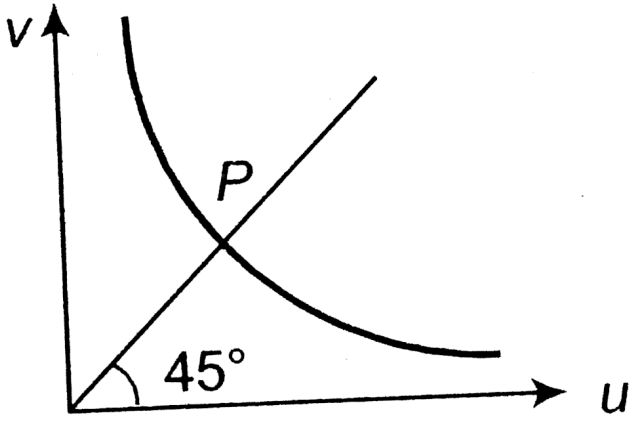

A. Smaller than f

B. Smaller than 2 f

C. Larger than 2f

D. Larger than f

Answer: C

Watch Video Solution

4. As the position of an object (u) reflected from a concave mirrorr is varies, the position of the image (v) also varies. By letting the u changes

from 0 to $+\infty$ the graph between v versus u will be

A.

B.

C.

D.

Answer: A

Watch Video Solution

5. The graph between u and v for a convex mirrorr is

A.

B.

C.

D.

Answer: A

Watch Video Solution

6. A convergent beam of light is incident on a convex mirror so as to converge to a distance 12 cm from the pole of the mirror. An inverted image of the same size is formed coincident with the virtual object. What is the focal length of the mirror ?

A. 24 cm

B. 12 cm

C. 6 cm

D. 3 cm

Answer: C

Watch Video Solution

7. A thin rod of 5 cm length is kept along the axis of a concave mirror of 10 cm focal length such that its image is real and magnified and one end

touches to rod. Its magnification will be

A. 1

B. 2

C. 3

D. 4

Answer: B

Watch Video Solution

8. A square wire of side $3.0cm$ is placed $25cm$ away from a concave mirror of focal length $10cm$. What is the area enclosed by the image of the wire ? The centre of the wire is on the axis of the mirror, with its two sides normal to the axis.

A. $4cm^2$

B. $6cm^2$

C. $16cm^2$

D. $36cm^2$

Answer: A

Watch Video Solution

9. A small piece of wire bent into an L shape, with upright and horizontal portions of equal lengths, is placed with the horizontal portion along the axis of the concave mirror whose radius of curvature is 10cm. I fthe bend is 20cm from the pole of the mirror, then the ration of the lengths of the images of the upright and horizontal portions of the wire is

A. $1:2$

B. $3:1$

C. $1:3$

D. $2:1$

Answer: B

Watch Video Solution

10. A cube of side 2m is placed in front of a concave mirror of focal l ength 1m with its face A at a distance of 3m and face B at a distance of 5m form the mirror. The distance between the images of faces A and B and heights of images of A and B are , repectively,

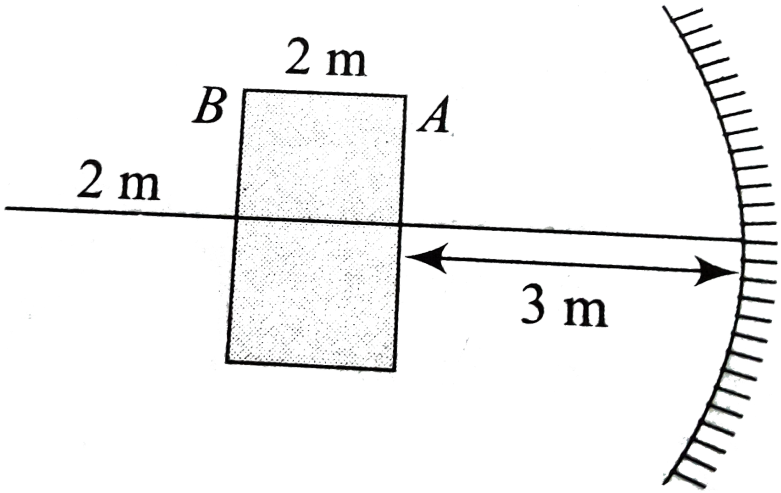

A. 1 m, 0.5 m, 0.25

B. 0.5 m, 1 m, 0.25 m

C. 0.5 m, 0.25 m , 1 m, 0.5

D. 0.25 m 1 m, 0.5 m

Answer: D

Watch Video Solution

11. AB is an incident beam of light and CD is a reflected beam (the number of reflections for this may be 1 or more than 1) of light. AB and CD are separated by some distance (may be large). It is possible by placing what type of mirror on the right side.

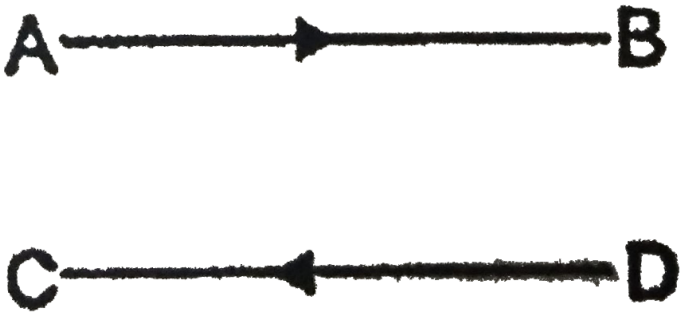

A. one plane mirror

B. one concave mirror

C. one convex mirror

D. none of these

Answer: B

Watch Video Solution

12. A point object is moving along principal axis of concave mirror with uniform velocity towards pole. Initially the object is at infinite distance from pole right side of the mirror as shown. Before the object collides with mirror, the number of times a which the distance between object and its image is $40cm$ are.

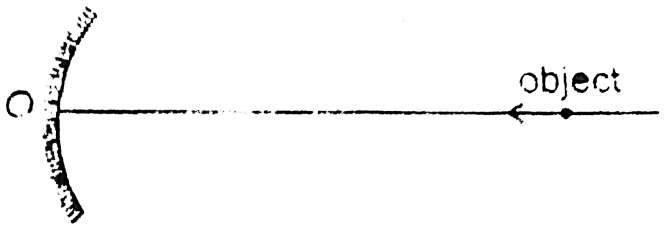

A. one time

B. two times

C. three times

D. data insufficient

Answer: C

Watch Video Solution

13. A real object is placed infront of a convex mirror (focal length f). It moves towards the mirror, the image also moves. If $V_i =$ speed of image and $V_0 =$ speed of the object and u is the distance of object from mirror along principal axis, then

A. $V_i \leq V_0 \text{ if } |u| < |F|$

B. $V_i > V_0 \text{ if } |u| > |F|$

C. $V_i < V_0 \text{ if } |u| > |F|$

D. $V_i = V_0 \text{ if } |u| = |F|$

Answer: A::C

Watch Video Solution

14. The positions of the object O (real or virtual) and the image I(real or virtual) with respect to the optical axis of a spherical mirror is shown. Then select the possible mirror and its position to realise it.

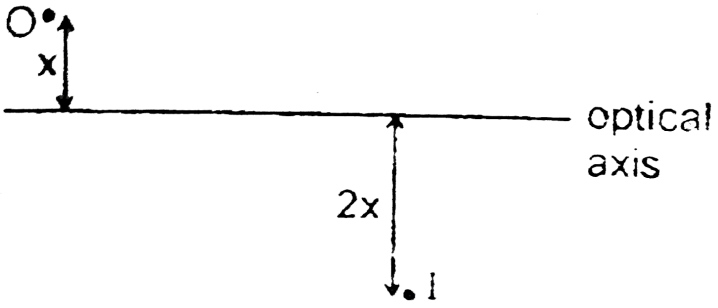

A. concave mirror closer to object

B. concave mirror closer to image

C. convex mirror closer to object

D. convex mirror closer to image

Answer: A::C

Watch Video Solution

Matching Column Type

1. Match the options of the following columns.

Column I

For real extended object,if image formed by a single mirror is erect, and if t

For real extended object, if the size image is smaller than object, the mirro

For real extended object, if image formed by asingle mirror is erect and if t

For spherical mirrors, a line u=v will cut the curve between u and v at a po

Column I	Column II
For real extended object,if image formed by a single mirror is erect, and if the size of image is smaller than object, the mirror is	(P)Concave
For real extended object, if the size image is smaller than object, the mirror is	(Q)Convex
For real extended object, if image formed by asingle mirror is erect and if the size of image is larger than object, then mirror is	(R)(f,f)
For spherical mirrors, a line u=v will cut the curve between u and v at a point.	(S)(2f,2f)

View Text Solution

Dpp 1 2

1. One side of a glass slab is silvered as shown. A ray of light is incident on the other side at angle of incidence $i = 45^\circ$. Refractive index of glass is given as 1.5. The deviation of the ray of light from its initial path when it

comes out of the slab is

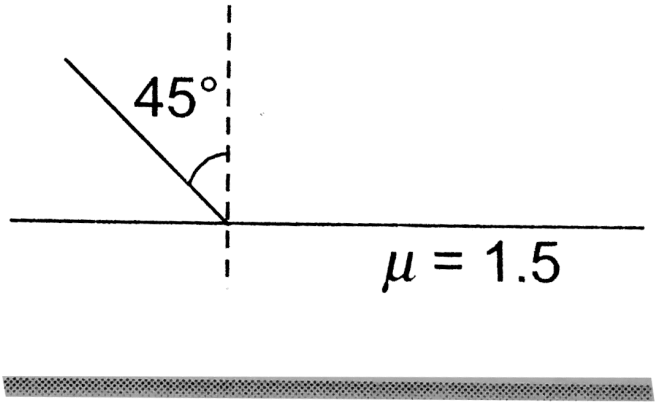

A. 90°

B. 180°

C. 120°

D. 45°

Answer: A

Watch Video Solution

2. When the rectangular metal tank is filled to the top with an unknown liquid, as observer with eyes level with the top of the tank can just see the

corner E, a ray that refracts towards the observer at the top surface of the liquid is shown. The refractive index of the liquid will be

A. 1.2

B. 1.4

C. 1.6

D. 1.9

Answer: A

View Text Solution

3. A transparent cube of $15cm$ edge contains a small air bubble. Its apparent depth when viewed through one face is $6cm$ and when viewed through the opposite face is $4cm$. Then the refractive index of the material of the cube is

A. 2.0

B. 2.5

C. 1.6

D. 1.5

Answer: D

Watch Video Solution

4. A plane mirror is placed at the bottom of the tank containing a liquid of refractive index μ. P is a small object at a height h above the mirror. An observer O vertically above P, outside the liquid sees P and its image in the mirror. The apparent distance between these two will be

A. $2\mu h$

B. $\frac{2h}{\mu}$

C. $\frac{2h}{\mu - 1}$

D. $h\left(1 + \frac{1}{\mu}\right)$

Answer: B

Watch Video Solution

5. One face of a rectangular glass plate 6 cm thick is silvered. An object held 8 cm in front of the first face, forms an image 12 cm behind the silvered face. The refractive index of the glass is

A. 0.4

B. 0.8

C. 1.2

D. 1.6

Answer: C

Watch Video Solution

6. A concave mirror is placed at the bottom of an empty tank with face upwards and axis vertical. When sunlight falls normally on the mirror, it is focussed at distance of $32cm$ from the mirror. If the tank filled with water $(\mu = 4/3)$ up to a height of $20cm$, then the sunlight will now get focussed at

A. 16 cm above water level

B. 9 cm above water level

C. 24 cm below water level

D. 9 cm below water level

Answer: B

Watch Video Solution

7. A slab of glass, of thickness 6 cm and refractive index 1.5, is placed in front of a concave mirror, the faces of the slab being perpendicular to the principal axis of the mirror. If the radius of curvature of the mirror is 40

cm and the reflected image coincides with the object, then the distance of the object from the mirror is

A. 30 cm

B. 22 cm

C. 42 cm

D. 28 cm

Answer: C

View Text Solution

8. A ray of light travels from an optically denser to rarer medium. The critical angle of the two media is C. The maximum possible deviation of the ray will be

A. $\left(\frac{\pi}{2} - C\right)$

B. 2C

C. $\pi - 2C$

D. $\pi - C$

Answer: C

Watch Video Solution

9. A point source of light S is placed at the bottom of a vessel containing a liquid of refractive index $5/3$. A person is viewing the source from above the surface. There is an opaque disc of radius $1cm$ floating on the surface. The centre of disc lies vertically above the source O. The liquid from the vessel is gradually drained out through a tap. What is the maximum height of the liquid for which the source cannot be seen at all.

A. 1.50 cm

B. 1.64 cm

C. 1.33 cm

D. 1.86 cm

Answer: C

Watch Video Solution

10. Light enters at an angle of incidence in a transparent rod of refractive index n. For what value of the refractive index of the material of the rod the light once entered into it will not leave it through its lateral face whatsoever be the value of angle of incidence.

A. $n > \sqrt{2}$

B. n=1

C. n=1.1

D. n=1.3

Answer: A

Watch Video Solution

11. An optical fibre consists of core of μ_1 surrounded by a cladding of $\mu_2 < \mu_1$. A beam of light enters from air at an angle α with axis of fibre.

The highest α for which ray can be travelled through fibre is

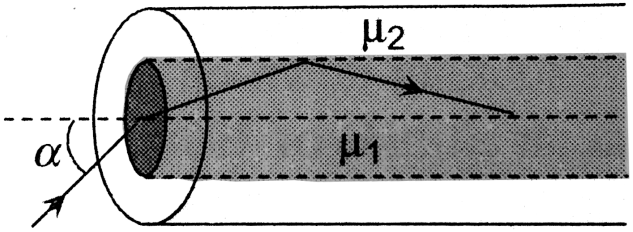

A. $\cos^{-1}\sqrt{\mu_2^2 - \mu_1^2}$

B. $\sin^{-1}\sqrt{\mu_1^2 - \mu_2^2}$

C. $\tan^{-1}\sqrt{\mu_1^2 - \mu_2^2}$

D. $\sec^{-1}\sqrt{\mu_1^2 - \mu_2^2}$

Answer: B

Watch Video Solution

12. A rod of glass $(\mu = 1.5)$ and of square cross section is bent into the shape shown in the figure. A parallel beam of light falls on the plane flat surface A as shown in the figure. If d is the width of a side and R is the radius of circular arc then for what maximum value of $\frac{d}{R}$ light entering

the glass slab through surface A emerges from the glass through B

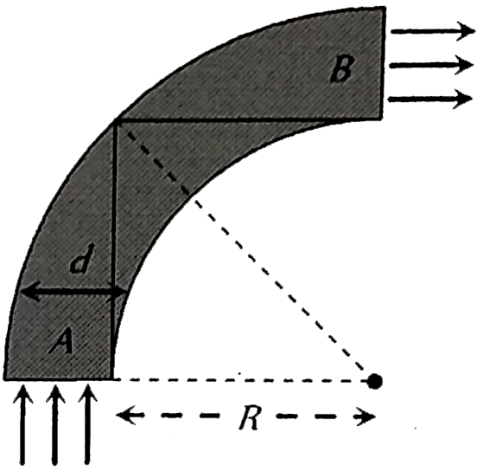

A. 1.5

B. 0.5

C. 1.3

D. None of these

Answer: B

Watch Video Solution

13. A ray of light travels from a medium of refractive index μ to air. Its angle of incidence in the medium is i, meansured from the normal to the boundary , and its angle of deviation is δ. δ is plotted against i. Which of the following best represents the resulting curve ?

A.

B.

C.

D.

Answer: A

Watch Video Solution

14. The apparent depth of water in cylindrical water tank of diameter $2Rcm$ is reducing at the rate of $xcm/\min$ when water is being drained out at a constant rate. The amount of water drained in $c.c.$ per minute is ($n_1 =$ refractive index of air, $n_2 =$ refractive index of water)

A. $x\pi R^2 n_1 / n_2$

B. $x\pi R^2 n_2 / n_1$

C. $2\pi R n_1 / n_2$

D. $\pi R^2 x$

Answer: B

Watch Video Solution

15. When light is incident on a medium at angle i and refracted into a second medium at an angle r, the graph of $\sin r$ versus $\sin i$ is as shown. From this one can conclude that

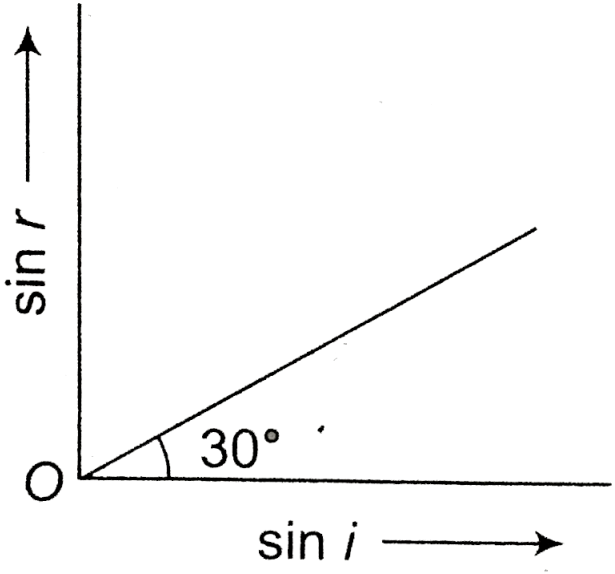

(i) the velocity of light in second medium is $\sqrt{3}$ times the velocity of light in the first medium

(ii) the velocity of light in the first medium is $\sqrt{3}$ times the velocity of ligth in second medium

(iii) the critical angle of the two media is given by $\sin i_C = 1\sqrt{3}$

(iv) the critical anlge of the two media is given by $\sin i_C = 1\sqrt{2}$

Watch Video Solution

Dpp 1 3

1. A parallel paraxial beam of light is incident on the arrangement as shown $(\mu_A = 3/2, \mu_B = 4/3)$. The two spherical surfaces are very close and each has a radius of curvature 10 cm. Find the point where the rays are focussed. (w.r.t. point of entry)

View Text Solution

2. A ray of light falls on the surface of a spherical glass paper weight making an angle α with the normal and is refracted in the medium at an angle β. The angle of deviation of the emergent ray from the direction of the incident ray is :

A. $(\alpha - \beta)$

B. $2(\alpha - \beta)$

C. $(\alpha - \beta)/2$

D. $(\beta - \alpha)$

Answer: B

Watch Video Solution

3. A poinit object O is placed in front of a glass rod having spherical end of radius of curvature $30cm$. The image would be formed at

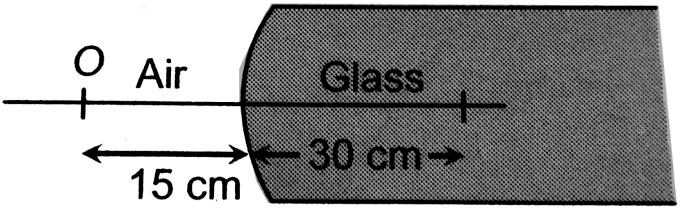

A. 30 cm left

B. Infinity

C. 1 cm to the right

D. 18 cm to the left

Answer: A

Watch Video Solution

4. A glass hemisphere of radius 0.04 m and refractive index of the material 1.6 is placed centrally over cross mark on a paper (i) with the flat face, (ii) with the curved face in contact with the paper. In each case, the cross mark is viewed directly from above. The position of the images will be

A. 0.04 m from the flat face, (ii) 0.025 m from the flat face

B. (i) At the same position of the cross mar, (ii)0.025 m below the flat face

C. (i) 0.025 m from the flat face, (ii) 0.04 m from the flat face

D. For both (i) and (ii) 0.025 m from the highest point of the hemisphere

Answer: B

Watch Video Solution

5. An air bubble in sphere having 4 cm diameter appears 1 cm from surface nearest to eye when looked along diameter If $._a \mu_8 = 1.5$, the distance of bubble from refracting surface is

A. $1.2cm$

B. $3.2cm$

C. $2.8cm$

D. $1.6cm$

Answer: A

View Text Solution

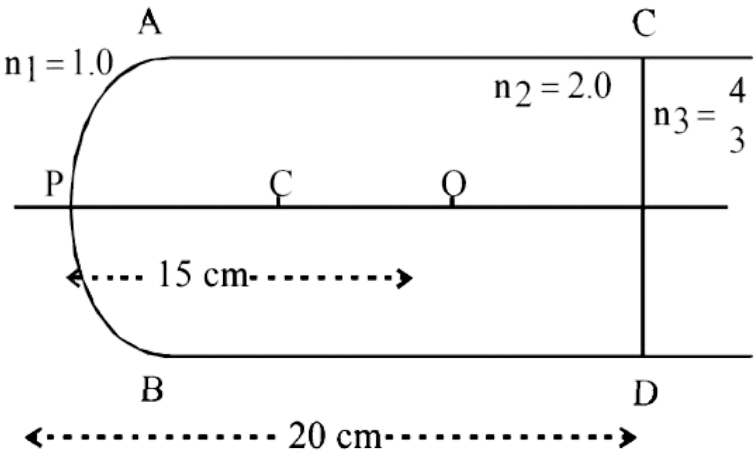

6.

A slab of a material of refractive index 2 shown in fig. has a curved surface APB of radius of curvature 10 cm and a plane surface CD. On the left of APB is air and on the right CD is water with refractive indices as given in the figure. An object O is placed at a distance of 15 cm from the pole P as shown. The distance of the final image of O from P, as viewed from the left is.....

A. $20cm$

B. $30cm$

C. $40cm$

D. $50cm$

Answer: B

Watch Video Solution

7. A parallel beam of light emerges from the opposite surface of the sphere when a point source of light lies at the surface of the sphere. The refractive index of the sphere is

A. $\frac{3}{2}$

B. $\frac{5}{3}$

C. 2

D. $\frac{5}{2}$

Answer: C

View Text Solution

8. In a thin spherical fish bowl of radius 10 cm filled with water of refractive index $4/3$ there is a small fish at a distance of 4 cm from the centre C as shown in the figure. Where will the image of fish appears, if seen from E.

A. $5.2cm$

B. $7.2cm$

C. $4.2cm$

D. $3.2cm$

Answer: A

View Text Solution

9. The observer 'O' sees the distance AB as infinitely large. If refractive index of liquid is μ_1 and that of glass is μ_2, then $\frac{\mu_1}{\mu_2}$ is :

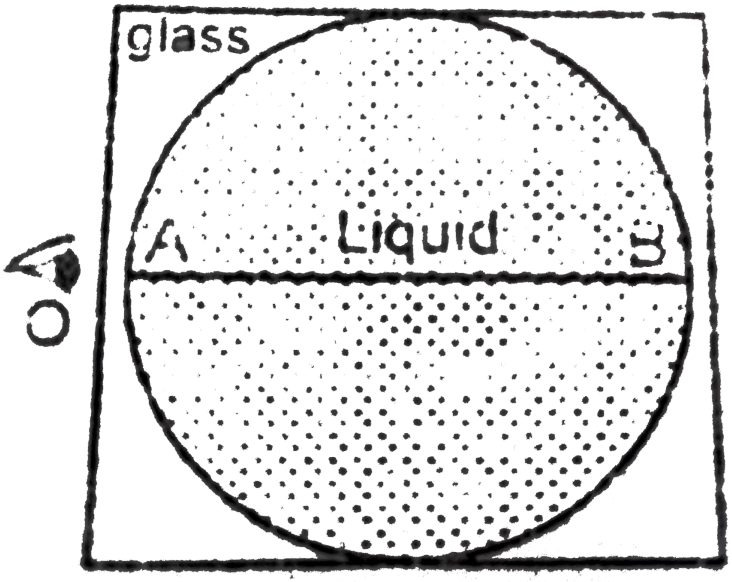

A. 2

B. $1/2$

C. 4

D. None of these

Answer: A

Watch Video Solution

10. The first factor length f_1 for refraction at a spherical surface is defined as the value of u corresponding to $v = \infty$ (as shown) with refractive indices of two mediums, as n_1 and n_2. The second focal length f_2 is defined as value of v for $u = \infty$.

A. f_2 is equal to $\dfrac{n_2 R}{(n_2 - n_1)}$

B. f_1 is equal to $\dfrac{n_2 R}{(n_2 - n_1)}$

C. f_2 is equal to (-) $\dfrac{n_2 R}{(n_2 - n_1)}$

D. f_1 is equal to (-) $\dfrac{n_2 R}{(n_2 - n_1)}$

Answer: A::D

View Text Solution

11. Figure shows a point object placed in front of a transparent sphere of radius 20 cm and refractive index 1.5. The sphere forms an image due to refraction at surface I followed by refraction at surface II. The sphere is

kept in air and the object is located at distance x from P_1. It is found that for $x > x_1$, the image formed due to refraction at surface I is real, the final image formed by the sphere is also real and forms to the right of P_2. For $x_2 < x < x_1$, the image formed by surface I is virtual while the final image formed by the sphere is real and forms to the right of P_2. However for $x < x_2$, the image formed by surface I and also the final image formed by the sphere are virtual. It is also found that the final image is virtual if the distance of image formed by surface I from P_2 is less than y. The object is now moved away from the sphere so that x becomes large and say, $x \to \infty$. In the given sphere is replaced by another one of the same radius but of refractive index 2.5, the final image is formed at distance y_2 from P_2.

Distance x_1 such that for $x > x_1$, the image formed by surface I and also the final image are real, is

A. 60 cm

B. 40 cm

C. 20 cm

D. 10 cm

Answer: B

View Text Solution

12. Figure shows a point object placed in front of a transparent sphere of radius 20 cm and refractive index 1.5. The sphere forms an image due to refraction at surface I followed by refraction at surface II. The sphere is kept in air and the object is located at distance x from P_1. It is found that for $x > x_1$, the image formed due to refraction at surface I is real, the final image formed by the sphere is also real and forms to the right of P_2. For $x_2 < x < x_1$, the image formed by surface I is virtual while the final image formed by the sphere is real and forms to the right of P_2. However for $x < x_2$, the image formed by surface I and also the final image formed by the sphere are virtual. It is also found that the final image is virtual if the distance of image formed by surface I from P_2 is less than y. The object is now moved away from the sphere so that x becomes large and say, $x \to \infty$. In the given sphere is replaced by another one of the

same radius but of refractive index 2.5, the final image is formed at distance y_2 from P_2.

Distance x_2 such that for $x_2 < x <_1$, the image formed by surface I is virtual but the final image is virtual. Then, y will be

A. 10 cm

B. 25 cm

C. 40 cm

D. 32.5 cm

Answer: A

View Text Solution

13. Figure shows a point object placed in front of a transparent sphere of radius 20 cm and refractive index 1.5. The sphere forms an image due to refraction at surface I followed by refraction at surface II. The sphere is kept in air and the object is located at distance x from P_1. It is found that

for $x > x_1$, the image formed due to refraction at surface I is real, the final image formed by the sphere is also real and forms to the right of P_2. For $x_2 < x < x_1$, the image formed by surface I is virtual while the final image formed by the sphere is real and forms to the right of P_2. However for $x < x_2$, the image formed by surface I and also the final image formed by the sphere are virtual. It is also found that the final image is virtual if the distance of image formed by surface I from P_2 is less than y. The object is now moved away from the sphere so that x becomes large and say, $x \to \infty$. In the given sphere is replaced by another one of the same radius but of refractive index 2.5, the final image is formed at distance y_2 from P_2.

As stated above, if the distance of image formed by Surface 1 from P_2 is less than y, the final image is virtual. Then, y will be

A. 40 cm

B. 60 cm

C. 80 cm

D. 100 cm

Answer: B

View Text Solution

14. Figure shows a point object placed in front of a transparent sphere of radius 20 cm and refractive index 1.5. The sphere forms an image due to refraction at surface I followed by refraction at surface II. The sphere is kept in air and the object is located at distance x from P_1. It is found that for $x > x_1$, the image formed due to refraction at surface I is real, the final image formed by the sphere is also real and forms to the right of P_2. For $x_2 < x < x_1$, the image formed by surface I is virtual while the final image formed by the sphere is real and forms to the right of P_2. However for $x < x_2$, the image formed by surface I and also the final image formed by the sphere are virtual. It is also found that the final image is virtual if the distance of image formed by surface I from P_2 is less than y. The object is now moved away from the sphere so that x becomes large and say, $x \to \infty$. In the given sphere is replaced by another one of the same radius but of refractive index 2.5, the final image is formed at distance y_2 from P_2.

For the object placed at $x \to \infty$, the given sphere of refractive index 1.5 forms an image at distance y_1 from P_2.

A. this image is real and $y_1 = 12.5cm \text{ right of } P_2$

B. this image is real and $y_1 = 10cm \text{ right of } P_2$

C. this image is real and $y_1 = 20cm \text{ right of } P_2$

D. this image is virtual and $y_1 = 12cm \text{ left of } P_2$

Answer: B

View Text Solution

15. Figure shows a point object placed in front of a transparent sphere of radius 20 cm and refractive index 1.5. The sphere forms an image due to refraction at surface I followed by refraction at surface II. The sphere is kept in air and the object is located at distance x from P_1. It is found that for $x > x_1$, the image formed due to refraction at surface I is real, the final image formed by the sphere is also real and forms to the right of P_2.

For $x_2 < x < x_1$, the image formed by surface I is virtual while the final image formed by the sphere is real and forms to the right of P_2. However for $x < x_2$, the image formed by surface I and also the final image formed by the sphere are virtual. It is also found that the final image is virtual if the distance of image formed by surface I from P_2 is less than y. The object is now moved away from the sphere so that x becomes large and say, $x \to \infty$. In the given sphere is replaced by another one of the same radius but of refractive index 2.5, the final image is formed at distance y_2 from P_2.

For the object placed at $x \to \infty$, a sphere of the same radius but of refractive index 2.5 forms an image at distance y_2 from P_2

A. this image is real and $y_2 = 2.5cm \text{ left of } P_2$

B.

C.

D.

Answer: C

View Text Solution

Dpp 1 4

1. The graph shows how the magnification m produced by a convex thin lens varies with image distance v. What was the focal length of the used ?

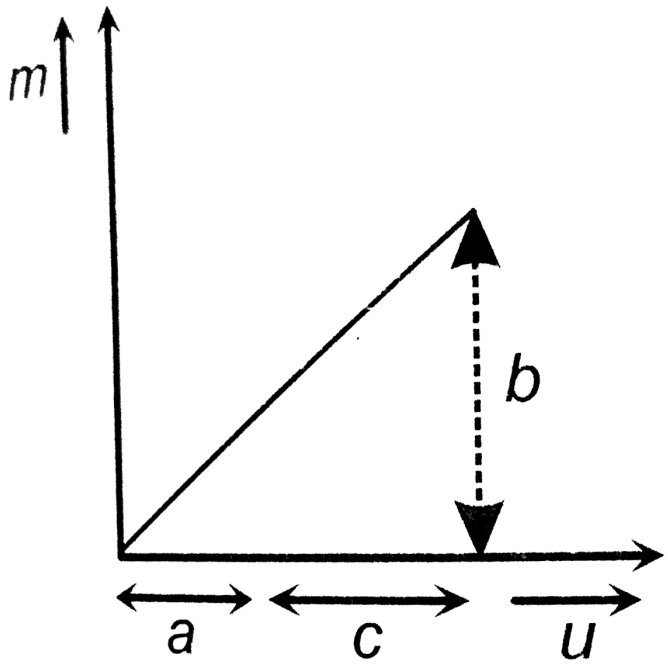

A. $\frac{b}{c}$

B. $\frac{b}{ca}$

C. $\frac{bc}{a}$

D. $\frac{c}{b}$

Answer: D

Watch Video Solution

2. The distance v of the real image formed by a convex lens is measured for various object distance u. A graph is poltted between v and u, which one of the following graphs is correct

A.

B.

C.

D.

Answer: D

View Text Solution

3. Point object O is placed on the principal axis of a convex lens of focal length 20cm at a distance of 40 cm to the left of it. The diameter of the lens is 10cm to the right of the lens at a distance h below the principal axis, then the maximum value of h to see the image will be

A. 0

B. 5 cm

C. 2.5 cm

D. 10 cm

Answer: C

Watch Video Solution

4. A luminous object is placed at a distance of $30cm$ from the convex lens of focal length $20cm$. On the other side of the lens, at what distance from

the lens a convex mirror of radius of curvature $10cm$ be placed in order to have an upright image of the object coincident with it ?

A. 12 cm

B. 30 cm

C. 50 cm

D. 60 cm

Answer: C

Watch Video Solution

5. Shown in the figure here is a convergent lens placed inside a cell filled with a liquid. The lens has focal length $+20cm$ when in air and its material has refractive index 1.50. If the liquid has refractive index 1.60,

the focal length of the system is

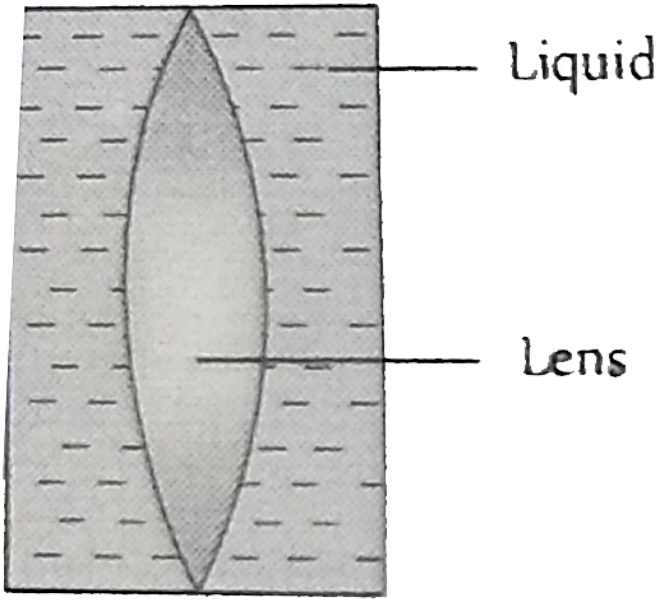

A. $+80cm$

B. $-80cm$

C. $-24cm$

D. $-100cm$

Answer: D

Watch Video Solution

6. Two point light sources are 24 cm apart. Where should a convex lens of focal length 9 cm be put in between them from one source so that the images of both the sources are formed at the same place

A. 6 cm

B. 9 cm above water level

C. 12 cm

D. 15 cm

Answer: A

Watch Video Solution

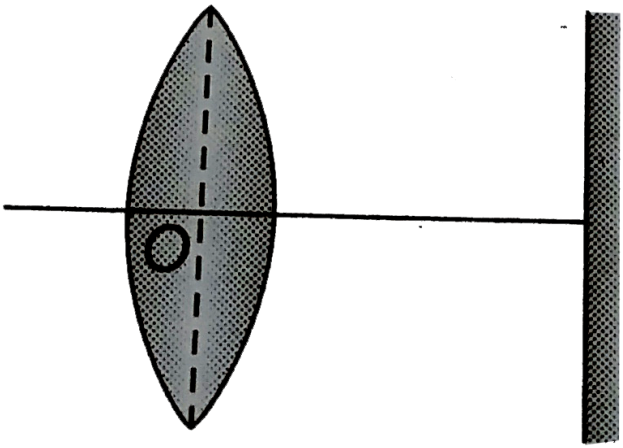

7.

The distance between a convex lens and a plane mirror is 10 cm. The parallel rays incident on the convex lens after reflection from the mirror forms image at the potical centre of the lens. Focal length of lens will be

A. 10 cm

B. 20 cm

C. 30 cm

D. Cannot be determined

Answer: B

Watch Video Solution

8. A small fish 0.4 m below the surface of a lake is viewed through a simple converging lens of focal length 3 m.the lens is kep at 0.2 m above the water surface such that the fish lies on the optical axis of the lens. Find the image of the fish seen by the observed. $\left(\mu_{water} = \frac{4}{3}\right)$

A. A distance of 0.2 m from the water surface

B. A distance of 0.6 m from the water surface

C. A distance of 0.3 m from the water surface

D. The same location of fish

Answer: D

Watch Video Solution

9. Figure given below shows a beam of light converging at point P. When a concave lens of focal length $16cm$ is introduced in the path of the beam at a place O shown by dotted line such that OP becomes the

axis of the lens, the beam converges at a distance x from the lens. The value x will be equal to

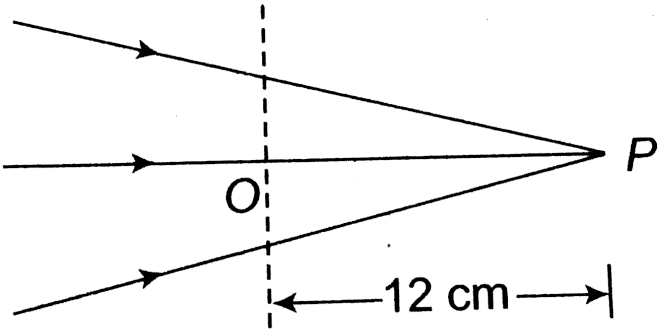

A. 12 cm

B. 24 cm

C. 36 cm

D. 48 cm

Answer: D

Watch Video Solution

10. The object distance u, the image distance v and the magnification m in a lens follow certain linear relations.

A. $\frac{1}{u}\text{versus}\frac{1}{v}$

B. m versus u

C. u versus v

D. m versus v

Answer: A::D

View Text Solution

11. A biconvex thin lens is prepared from glass of refractive index $\mu_2 = \frac{3}{2}$. The two conducting surfaces have equal radii of 20 cm each. One of the the surface is silvered from outside to make it reflecting. It is placed in a medium of refractive index $\mu_1 = \frac{5}{3}$. It acts as a

A. converging mirror

B. diverging mirror

C. concave mirror of focal length 12.5 cm

D. convex mirror of focal length 12.5 cm

Answer: A::C

View Text Solution

12. A convex lens of focal length 15 cm and concave mirror of focal length 30 cm are kept their optical axes PQ and RS parallel but separated in vertical direction by 0.6 m, as shown. The distance between the lens and mirror is 30 cm. An upright object AB of height 1.2 m is placed on the optic axic PQ of the lens at a distance of 20 cm from the lens.

Find the linear magnification of the first image after refraction from the lens.

A. $+3$

B. -3

C. $+2$

D. -2

Answer: B

View Text Solution

13. A convex lens of focal length 15 cm and concave mirror of focal length 30 cm are kept their optical axes PQ and RS parallel but separated in vertical direction by 0.6 m, as shown. The distance between the lens and mirror is 30 cm. An upright object AB of height 1.2 m is placed on the optic axic PQ of the lens at a distance of 20 cm from the lens.

Find the linear magnification of the second image after reflection from the mirror.

A. $+2$

B. -2

C. $+\frac{1}{2}$

D. $-\frac{1}{2}$

Answer: C

View Text Solution

14. A convex lens of focal length 15 cm and concave mirror of focal length 30 cm are kept their optical axes PQ and RS parallel but separated in vertical direction by 0.6 m, as shown. The distance between the lens and mirror is 30 cm. An upright object AB of height 1.2 m is placed on the optic axic PQ of the lens at a distance of 20 cm from the lens.

If A'B' is the final image formed, A' corresponding to A and B' corresponding to B, find the distance of B' below optics axis of lens.

A. 0.3 m

B. 0.5 m

C. 0.6 m

D. None of these

Answer: A

View Text Solution

15. A convex lens of focal length 15 cm and concave mirror of focal length 30 cm are kept their optical axes PQ and RS parallel but separated in vertical direction by 0.6 m, as shown. The distance between the lens and mirror is 30 cm. An upright object AB of height 1.2 m is placed on the optic axic PQ of the lens at a distance of 20 cm from the lens.

As in the lat problem, find the distance of A' below the optic axis of lens.

View Text Solution

Dpp 1 5

1. A ray of light is incident on the hypotenuse of a right-angled prism after travelling parallel to the base inside the prism. If μ is the refractive

index of the material of the prism, the maximum value of the base angle for which light is totally reflected from the hypotenuse is

A. $\sin^{-1}\left(\frac{I}{\mu}\right)$

B. $\tan^{-1}\left(\frac{1}{\mu}\right)$

C. $\sin^{-1}\left(\frac{\mu-1}{\mu}\right)$

D. $\cos^{-1}\left(\frac{1}{\mu}\right)$

Answer: D

Watch Video Solution

2. The refractive indices of the material of the prism and liquid are 1.56 and 1.32 respectively. What will be the value of θ for the following

refraction?

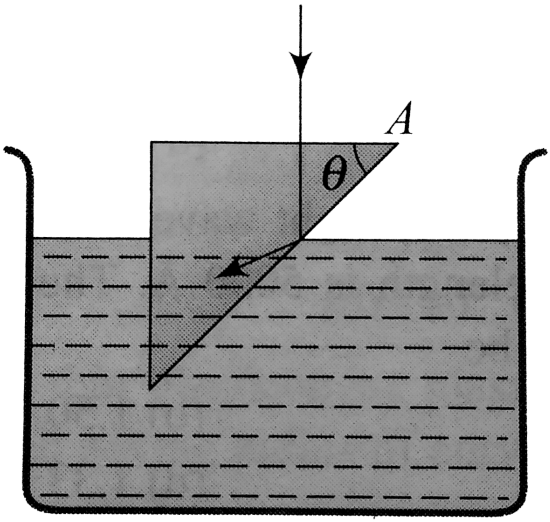

A. $\sin\theta \leq \frac{13}{11}$

B. $\sin\theta \leq \frac{11}{13}$

C. $\sin\theta \leq \frac{\sqrt{3}}{2}$

D. $\sin\theta \leq \frac{1}{\sqrt{2}}$

Answer: B

Watch Video Solution

3. A prism having an apex angle of 4° and refractive index of 1.50 is located in front of a vertical plane mirror as shown in the figure. A horizontal ray of light is incident on the prism. The total angle through which the ray is deviated is:

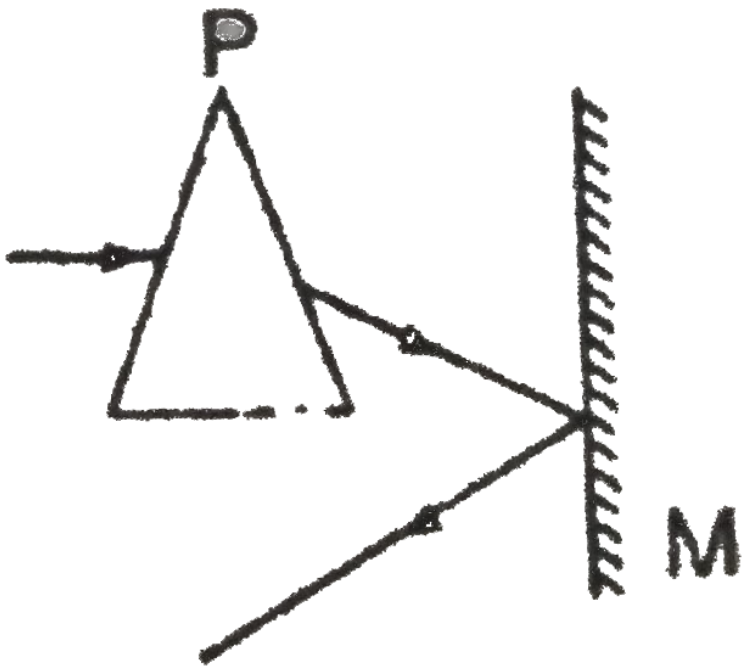

A. 176°

B. 4°

C. 178°

D. 2°

Answer: C

Watch Video Solution

4. A light ray is incident by grazing one of the face of a prism and after refraction ray does not emerge out, what should be the angle of prism while critical angle is C ?

A. Equal to 2C

B. Less than 2C

C. More than 2C

D. None of the above

Answer: C

Watch Video Solution

5. The light ray is incidence at angle of 60° on a prism of angle 45° . When the light ray falls on the other surface at 90° , the refractive index of the material of prismμ and the angle of devaition δ are given by

A. $\mu = \sqrt{2}, \delta = 30^\circ$

B. $\mu = 1.5, \delta = 15^\circ$

C. $\mu = \frac{\sqrt{3}}{2}, \delta = 30^\circ$

D. $\mu = \sqrt{\frac{3}{2}}, \delta = 15^\circ$

Answer: D

Watch Video Solution

6. A light ray is incident upon a prism in minimum deviation position and suffers a deviation of 34°. If the shaded half of the prism is knocked off,

the ray will

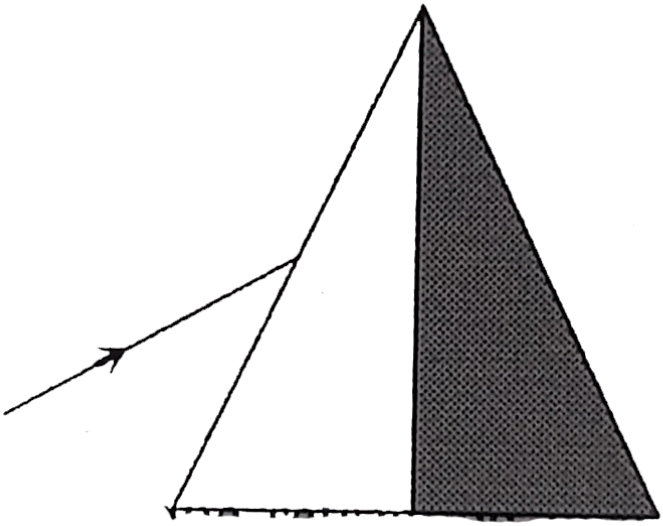

A. suffer a deviation of 34°

B. suffer a deviation of 68°

C. suffer a deviation of 17°

D. not come out of the prism

Answer: C

Watch Video Solution

7. A ray of monochromatic light is incident on one refracting face of a prism of angle 75°. It passes through the prism and is incident on the other face at the critical angle. If the refractive index of the material of the prism is $\sqrt{2}$, the angle of incidence on the first face of the prism is

A. 30°

B. 45°

C. 60°

D. 0°

Answer: B

Watch Video Solution

8. Three glass prisms A , B and C of same refractive index are placed in contact with each other as shown in figure, with no air gap between the prisms. Monochromatic ray of light OP passes through the prism assembly and emerges as QR . The conditions of minimum deviation is

satisfied in the prisms

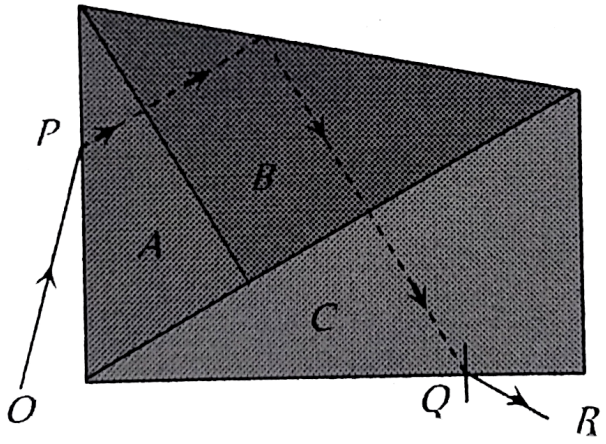

A. A and C

B. B and C

C. A and B

D. In all prisms A, B and C

Answer: C

Watch Video Solution

9. The refractive index of a material of a prism of angles $45^\circ - 45^\circ - 90^\circ$ is 1.5. The path of the ray of light incident normally on

the hypotenuse side is shown in

A. 

B. 

C. 

D. 

Answer: A

Watch Video Solution

10. Angle of prism is A and its one surface is silvered. Light rays falling at an angle of incidence $2A$ on first surface return back through the same path after suffering reflection at second silvered surface. Refraction index of the material of prism is

A. 2 sin A

B. 2 cos A

C. $\frac{1}{2}\cos A$

D. tan A

Answer: B

Watch Video Solution

11. A ray of light incident normally on an isosceles right angled prism travels as shown in the figure. The least value of the refractive index of the prism must be

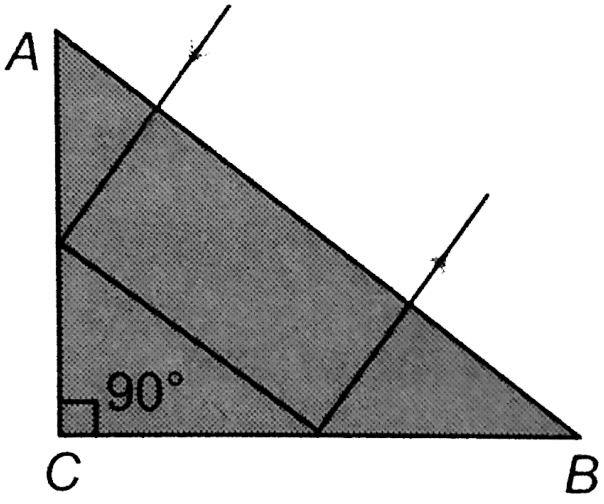

A. $\sqrt{2}$

B. $\sqrt{3}$

C. 1.5

D. 2.0

Answer: A

Watch Video Solution

12. When a ray of light is incident normally on one refracting surface of an equilateral prism (Refractive index of the material of the prism $= 1.5$

A. Emerging ray is deviated by 30°

B. Emerging ray is deviated by 45°

C. Emerging ray just grazes the second refracting surface

D. The ray undergoes total internal reflection at the second refracting surface

Answer: D

Watch Video Solution

13. Read the paragraph and the figure carefully and answer the questions.

The figure shows a constant deviation prism ABCD. The incident ray is PQ and the emergent ray is ST. Although it is made up of one piece of glass, it is equivalent to two $30^\circ - 60^\circ - 90^\circ$ prisms and one $45^\circ - 45 - 90^\circ$ prism. The angle θ_1 is the angle of incidence on face AB. The path of the ray inside the prism is indicated in the figure.

For this prism, $\mu = 2\sin\theta_1$

The ratio of $\frac{\theta_1}{\theta_2}$ is

A. 1

B. $\frac{1}{2}$

C. $\sqrt{2}$

D. $\frac{1}{\sqrt{2}}$

Answer: A

View Text Solution

14. Read the paragraph and the figure carefully and answer the questions.

The figure shows a constant deviation prism ABCD. The incident ray is PQ and the emergent ray is ST. Although it is made up of one piece of glass, it is equivalent to two $30^\circ - 60^\circ - 90^\circ$ prisms and one $45^\circ - 45 - 90^\circ$ prism. The angle θ_1 is the angle of incidence on face AB. The path of the ray inside the prism is indicated in the figure.

For this prism, $\mu = 2\sin\theta_1$

The total deviation of the incident ray when it emerges out of the prism is

A. 90°

B. 60°

C. 30°

D. 45°

Answer: A

View Text Solution

15. Read the paragraph and the figure carefully and answer the questions.

The figure shows a constant deviation prism ABCD. The incident ray is PQ and the emergent ray is ST. Although it is made up of one piece of glass, it is equivalent to two $30^\circ - 60^\circ - 90^\circ$ prisms and one $45^\circ - 45 - 90^\circ$ prism. The angle θ_1 is the angle of incidence on face AB. The path of the ray inside the prism is indicated in the figure.

For this prism, $\mu = 2\sin\theta_1$

The angle of refraction on the face AB is

A. 30°

B. 45°

C. 15°

D. 40°

Answer: A

View Text Solution

Dpp 1 6

1. A simple telescope, consisting of an objective of focal length 60 cm and a single eye lens of focal length 5 cm is focussed on a distant object in such a way that parallel rays comes out from the eye lens. If the object subtends an angle 2° at the objective, the angular width of the image

A. 10°

B. 24°

C. 50°

D. $1/6^\circ$

Answer: B

Watch Video Solution

2. The focal length of objective and eye lens of a astronomical telescope are respectively $2m$ and $5cm$. Final image is formed at (i) least distance of distinct vision (ii) infinity. The magnifying power in both cases will be

A. $-48, \ -40$

B. $-40, \ -48$

C. $-40, 48$

D. $-48, 40$

Answer: A

Watch Video Solution

3. A compound microscope has an eye piece of focal length $10cm$ and an objective of focal length $4cm$. Calculate the magnifcation, if an object is kept at a distance of $5cm$ from the objective so that final image is formed at the least distance vision $(20cm)$

A. 12

B. 11

C. 10

D. 13

Answer: A

Watch Video Solution

4. The length of the compound microscope is $14cm$. The magnifying power for relaxed eye is 25. If the focal length of eye lens is $5cm$, then the object distance for objective lens will be

A. 1.8 cm

B. 1.5 cm

C. 2.1 cm

D. 2.4 cm

Answer: A

Watch Video Solution

5. If the focal length of objective and eye lens are $1.2cm$ and $3cm$ respectively and the object is put $1.25cm$ away from the objective lens and the final image is formed at infinity. The magnifying power of the microscope is

A. 150

B. 200

C. 250

D. 400

Answer: B

Watch Video Solution

6. The focal length of objective and eye lens of a microscope are $4cm$ and $8cm$ respectively. If the least distance of distinct vision is $24cm$ and object distance is $4.5cm$ from the objective lens, then the magnifying power of the microscope will be

A. 18

B. 32

C. 64

D. 20

Answer: B

Watch Video Solution

7. In an astronomical telescope in normal adjustment a straight black line of length L is drawn on inside part of objective lens. The eye piece forms a real image of this line. The length of this image is I. The magnification of the telescope is

A. $\frac{L}{l}$

B. $\frac{L}{l}+1$

C. $\frac{L}{l}-1$

D. $\frac{L+l}{L-l}$

Answer: A

Watch Video Solution

8. A telescope uses light having wavelength 5000 Å and aperture of the objective is 10 cm, then the resolving limit and magnifying power of the telescope is respectively

A. 6.1×10^{-6} rad and 12

B. 5.0×10^{-6} rad and 12

C. 6.1×10^{-6} rad and 8.3×10^{-2}

D. 5.0×10^{-6} rad and 8.3×10^{-2}

Answer: A

View Text Solution

9. The diameter of the moon is $3.5 \times 10^3 km$ and its distance from the earth is $3.8 \times 10^5 km$. It is seen by a telescope having the focal length of the objective and the eye-piece as $4m$ and $10cm$ respectively. The diameter of the image of the moon will be approximately

A. 15°

B. 20°

C. 30°

D. 35°

Answer: B

Watch Video Solution

10. The focal length of an objective of a telescope is 3 metre and diameter 15 cm . Assuming for a normal eye, the diameter of the pupil is 3 mm for its complete use, the focal length of eye piece must be

A. 6 cm

B. 6.3 cm

C. 20 cm

D. 60 cm

Answer: A

Watch Video Solution

11. A telescope has an objective lens of $10cm$ diameter and is situated at a distance of one kilometre from two objects. The minimum distance between these two objects, which can be resolved by the telescope, when the mean wavelength of light is 5000Å, of the order of

A. 0.5 m

B. 5 m

C. 5 mm

D. 5 cm

Answer: C

Watch Video Solution

12. If the focal length of the objective lens and the eye lens are 4 mm and 25 mm respectively in a compound microscope. The length of the tube is 16 cm . Find its magnifying power for relaxed eye position

A. 32.75

B. 327.5

C. 0.3275

D. None of the above

Answer: B

Watch Video Solution

Question Bank

1. The diagram shows a mirror system. If after two reflections the image and the object O coincide with each other, then the value of radius of curvature (in metre) of the concave mirror is (Take $a = 3m$)

'(##CEN_KSR_PHY_JEE_C26_E01_001_Q01##)'

View Text Solution

2. A lens has one surface as concave with $R_1 = 2m$ and the other as convex with $R_2 = 3m$. The magnitude of focal length (in m) of lens is (If $\mu_r = 1.5$)

View Text Solution

3. The near vision of an average person is $25cm$. To view an object with an angular magnification of 10, what should be the power of the microscope ?

Watch Video Solution

4. A compound microscope consists of an objective. lens of focal length $2(\sim cm)$ and eyepiece of focal length $6.25cm$ separated by a distance of $15cm$. How far (in cm) from the objective lens should an object be placed in order to obtain the final image at the least distance of distinct vision?

View Text Solution

5. As shown in the figure, one of the faces of the prism of retive angle 30° and retive index $\mu = \sqrt{2}$, is silvered. At what angle of incidence i (in degrees) the ray must fall on unsilvered surface, sò that after retion and

reflection it retrace its path?

'(##CEN_KSR_PHY_JEE_C26_E01_005_Q02##)'

View Text Solution

6. The image produced by a concave mirror is one-quarter the size of object. If the object is moved 5cm closer to the mirror, the image will only be half the size of the object. The focal length of mirror is

Watch Video Solution

7. A point object O can' move along vertical line AB as shown in the figure. At $t = 0$, the image of the object is visible to D and then the object O is released from rest from point A : The time for which object is visible to D is T. Find T^2. (Given $L = 9.8m$)

'(##CEN_KSR_PHY_JEE_C26_E01_007_Q03##)'

View Text Solution

8. A vessel is quarter filled with a liquid of refractive index μ. The remaining parts of the vessel is filled with an immiscible liquid of refractive index $3\mu/2$. The apparent depth of the vessel is 50% of the actual depth. The value of μ is

Watch Video Solution

9. A point object is placed at a distance of $62cm$ from a concave mirror of focal length $20cm$. A slab of the thickness $6cm$ and retive index $\mu = \frac{3}{2}$ is placed in between the object and the mirror at a distance $1.5\ (cm)$ from the mirror. The distance (in cm) of the final image from the mirror is

View Text Solution

10. The distance between the object and its real' image in convex lens is $90cm$. It has happened in two positions of the lens whose difference is $30cm$. Then the focal length (in cm) of the lens is

View Text Solution

11. An opaque cylindrical tank with an open top has a diameter of $6.00m$ and is completely filled with water. When the setting sun reaches an angle of 37° above the horizon, sunlight ceases to illuminate any part of the. bottom of the tank. The depth (in metre) of the tank is

View Text Solution

12. O text (is the point object shown in the diagram.)If the mirror starts moving with velocity $\sqrt{3}$m/s, then find velocity (in m/s) of the image.

'(##CEN_KSR_PHY_JEE_C26_E01_012_Q04##)'

View Text Solution

13. Find the position (in cm and only magnitude) of the final image of the object for the arrangement shown.

'(##CEN_KSR_PHY_JEE_C26_E01_013_Q05##)'

View Text Solution

View Text Solution

14. Focal length of objective of a compound microscope is $4mm$ and $theima \geq isf$ or $medatadis\tan ceof$224mm from it. If angular magnification is 550 , then focal length (in cm) of eyepiece for normal adjustment is

View Text Solution

15. As shown in the figure, light ray P enters slab at an angle 60° with normal and inside the slab, light ray Q suffers total internal reflection. Find the minimum retive index of the slab.

'(##CEN_KSR_PHY_JEE_C26_E01_015_Q06##)'

View Text Solution

16. A point object is moving with velocity $6i + j + 2k$ (m/s)in front of a plane mirror whose refiecting side is xz -planc. If the mirror also moves

with a velocity $\hat{i} - \hat{j}$ (m/s), then what is the speed (in m/s) of the image? (Round-off the answer to nearest integer)

View Text Solution

17. A lenśmaker has to đesign an achromatic combination of cffective power $0.5D$. If the two types of glasses tó be used (say A and B) have dispersive powers in the ratio $\omega_A : \omega_B = 3:5$, then the magnitude of focal length (in cm) of the lens made from glass A is

View Text Solution

18. The optical system consiș̣t of a thin convex lens of focal length $30cm$ and a plane mirror $15cm$ behind the lens. An object is placed $15cm$ in front of the lens. The distance (in cm) of final image from the lens is

View Text Solution

19. A simple telescope, consisting of an objective of focal length $60cm$ and a single eye lens of focal length $5cm$ is focussed on a distant object is such a way that parallel rays comes out from the eye lens. If the object subtends an angle 2° at the objective, the angular width of the image.

Watch Video Solution

20. In the shown figure, the focal length of equivalent system is $\frac{50x}{13}$. Find the value of x.

'(##CEN_KSR_PHY_JEE_C26_E01_020_Q07##)'

View Text Solution

21. A certain prism is found to produce a minimum of 38°. It produces a deviation of 44° when the angle of incident is either 42° or 62°. What is the angle of incidence when it is undergoing minimum deviation?

Watch Video Solution

22. In the above figure, x is any instantaneous position. The mirror is rotating about z -axis with angular velocity ω 'in anticlockwise direction and the objeć t is moving with velocity v along x -axis. If the magnitude of velocity of image is $ac\frac{m}{s}$ at the given instant, then find the value of $\frac{36a}{31}$, (Given: $\theta = 30^\circ, \omega = 1\frac{rad}{s}, v = 1c\frac{m}{s}, x = 1m$)

'(##CEN_KSR_PHY_JEE_C26_E01_022_Q08##)'

View Text Solution

23. For the given figure, the radjus of curvature of each surface is $R = 16cm$. Rays of light parallel to the axis of lens from left of the lens traversing through the lens get focused at distance f from the lens. Find the value of magnitude of f. (μ represents retive index and lens is silvered as shown)

'(##CEN_KSR_PHY_JEE_C26_E01_023_Q09##)'

View Text Solution

24. A pin is placed $10cm$ in front of a convex lens of focal length $20cm$. The lens is made of material having retive index 1.5. The surface of the lens farther away from the pin is silvered and has a radius of curvature $22cm$. Determine the position (in cm and only magnitude) of the final image.

View Text Solution

25. The principal section of a glass prism is an isosceles $\Delta(PQR)$ with $PQ = PR$. The face PR is silvered. A ray is incident perpendicularly on face PQ and after two reflections it emerges from base QR, normal to it. The angle of the prism is given by $\frac{\pi}{\alpha}(rad)$. Find the value of α.

View Text Solution

26. The observer O sees the distance AB as infinitely large. If retive index of liquid is μ_1 and that of glass is μ_2, then $\frac{\mu_1}{\mu_2}$ is

'(##CEN_KSR_PHY_JEE_C26_E01_026_Q10##)'

View Text Solution

27. An object moves with a uniform velocity $u_0 = 5\frac{m}{s}$ along the axis of a concave spherical mirror of focal length $f = -10cm$. If the object is at the centre of curvature C at certain instant, then the magnitude of acceleration of image at this instant is $a\frac{m}{(s)^2}$. Find a.

'(##CEN_KSR_PHY_JEE_C26_E01_027_Q11##)'

View Text Solution

28. Optical axis of a thin equi-convex lens is the x -axis. The co-ordinates of a point object and its image are $(10cm,$ 1 cm) and $(100cm, -2cm)$, respectively.

View Text Solution

29. A light ray is incident on a transparent sphere of index = $\sqrt{2}$, at an angle of incidence =45° , What is the deviation of a tiny fraction of the ray, which enters the sphere, undergoes two internal reflections and then refracts out into air?

Watch Video Solution

30. A ray of light enters a glass sphere, and after three'total internal reflections it travels into original direction as shown in the figure. If μ is the retive index of sphere, then the relation between μ and β is expressed as $\sin^2 x\beta + \mu^2 \sin^2 \beta = 1$. Find the value of x.

'(##CEN_KSR_PHY_JEE_C26_E01_030_Q12##)'

View Text Solution

31. As shown in the figure, left half of the glass, sphere is surrounded with a medium having retive index 3 and the right half is surrounded with medium having retive index $\sqrt{3}$. A ray is incident on it at an angle of 60°.

Find the total deviation' (in degree) as the ray comes out of the sphere.

'(##CEN_KSR_PHY_JEE_C26_E01_031_Q13##)'

View Text Solution

32. An optical fibre of retive index n is surrounded by air. A light ray enters the end of the fibre as shown in the figure. The largest value of ϕ permitted, if the ray incidents on the wall of the fibre at criticál angle for the fibre-air interface, is given by $\sin\left(\frac{\phi}{2}\right) = \left(\frac{xn^2 - 4}{y}\right)^{\frac{1}{2}}$. Find (xy).

'(##CEN_KSR_PHY_JEE_C26_E01_032_Q14##)'

View Text Solution

33. In the figure shown, a point object O is plaiced in air. A spherical boundary of radius of curvature $1.0(\sim m)$ separates various media. AB is the principal axis. The retive index above AB is 1.6 and below AB is 2.0. The separation(in m) between the images formed due to retion at

spherical surface is

'(##CEN_KSR_PHY_JEE_C26_E01_033_Q15##)'

View Text Solution

34. A very expensive diamond is polished into a perfect sphere of radius $5cm$. The back surface of the sphere is then covered with silver. If d is the distance of the source of light S from the surface of sphere, then the, image coincides with the source. If the index of retion of diamond is 2.4, then $d =$ ..... $xx5cm$.

'(##CEN_KSR_PHY_JEE_C26_E01_034_Q16##)'

View Text Solution

35. The dispersive power of crown and flint glasses are 0.02 and 0.04, respectively. An achromatic converging lens of focal length $40(\sim cm)$ is made by keeping two lenses, one of crown glass and the other of flint glass, in contact with each other. The magnitude of product of focal lengths (in cm) of the two lenses are

Watch Video Solution

36. Parallel beam is incident on a thin lens and radii $25cm$ of each of the surfaces as shown. What should be the thickness t of a slab (in cm`) between the lens and the screen so that the final image is formed on the screen?

'(##CEN_KSR_PHY_JEE_C26_E01_036_Q17##)'

View Text Solution

37. A concave mirror of focal length $20cm$ and a convex lens of focal length $10(\sim cm)$ are kept with their optic axis parallel but separated by $0.5mm$ as shown in the figure.The distance between the lens and the mirror is $10cm$. An object of height $3\ \min$ is placed on the optical axis of the lens at a distance of $15^{\circ}cm$ from the lens. Find the height of the image (in mm) formed by the mirror after retion from the lens.

'(##CEN_KSR_PHY_JEE_C26_E01_037_Q18##)'

View Text Solution

38. In the given figure, ABC is a right angled isosceles prism kept in air. A ray of light is incident on it normally as shown in the figure. Retive index of the prism is varying with time t as $\mu = (1 + 0.4t)$, where t is in seconds. The angular velocity (in $ra\frac{d}{s}\Big)oftheemer \geq ntray, attime$t=1s` is

'(##CEN_KSR_PHY_JEE_C26_E01_038_Q19##)'

View Text Solution

39. A curved thick glass surface is silvered at curved face and is not silvered on plane surface. Object is placed at A as shown in the figure. Consider P (pole of the silyered surface) as origin. If x co-ordinate of final image is 2n cm, then find n.

'(##CEN_KSR_PHY_JEE_C26_E01_039_Q20##)'

View Text Solution

40. An equiconvex lens having $\mu = 1.5$ and radius of curvature $10cm$ is.cut into four equal parts as shown in the diagram. Now two parts are used to form' the image as shown in the diagram Now considering O as origin $(0, 0)$, if x and y co-ordinate of image is (ncm, mcm), then the value of $(n \times m)$ is

'(##CEN_KSR_PHY_JEE_C26_E01_040_Q21##)'

View Text Solution