MATHS

BOOKS - NAGEEN PRAKASHAN

ENGLISH

HERONS'S FORMULA

Solved Examples

1. Find the area of a triangle whose sides are 17 cm, 8 cm and 15 cm long.

A. $75cm^2$

B. $60cm^2$

C. $45cm^2$

D. $120cm^2$

Answer: B

Watch Video Solution

2. Find the area of a triangle whose sides are 20 cm, 34 cm and 42 cm. Hence find the height corresponding to the longest side.

Watch Video Solution

3. The lengths of the sides of a triangle are in the ratio 4 : 5 : 3 and its perimeter is 96 cm. Find its area.

Watch Video Solution

4. The base of an isosceles triangle is 12 cm and its area is 48 cm^2. Find the equal sides of the triangle.

Watch Video Solution

5. Find the area of a triangular field, the length of whose sides are 275 m, 660 m and 715 m. What is the cost of cultivating the field at the rate of Rs. 200 per hectare ?

Watch Video Solution

6. In figure, $ABCD$ is a field in the form of a quadrilateral whose sides are indicated in the

figure. If $\angle DAB = 90^0$, Find the area of the field.

Watch Video Solution

7. Find the area of a trapezium whose parallel sides $25cm, 13cm$ and other sides are $15cm$ and $15cm$

Watch Video Solution

8. Kamla has a triangular field with sides 240 m, 200 m, 360 m, where she grew wheat. In another triangular field with sides 240 m, 320 m, 400 m adjacent to the previous field, she wanted to grow potatoes and onions. She divided the field in two par

Watch Video Solution

9. A rhombus shaped field has green grass for 18 cows to graze. If each side of the rhombus

is 30 m and its longer diagonal is 48 m, how much area of grass field will each cow be getting?

Watch Video Solution

10. ABCD is a rectangle with AB=16 units and BC=12 units. F is a point on AB and E is a point on CD such that AFCE is a rhombus. Find the length of EF.

Watch Video Solution

Problems From NCERT / Exemplar

1. A traffic signal board, indicating 'SCHOOL AHEAD' , is an equilateral triangle with side a. Find the area of the signal board, using Heron's formula. If its perimeter is 180 cm, what will be the area of the signal board?

Watch Video Solution

2. This triangular side walls of a flyover have been used for advertisements. This sides of

the walls are 122 m, 22m and 120 m (see figure). The advertisements yield an earning of Rs. 500 per m^2 per year. A company hired one of its walls for 3 months. How much rent did it pay ?

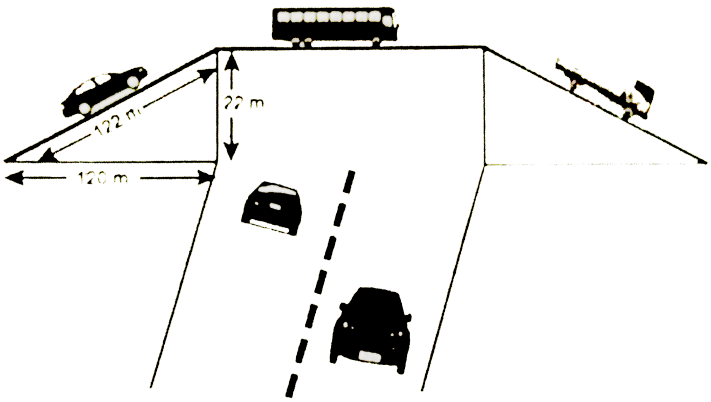

Watch Video Solution

3. Radha made a picture of an aeroplane with coloured paper as shown in figure. Find the total area of the paper used.

Watch Video Solution

4. A triangle and a parallelogram have the same base and the same area. If the sides of the triangle are 26 cm, 28 cm and 30 cm, and the parallelogram stands on the base 28 cm, find the height of the parallelogram.

Watch Video Solution

5. An umbrella is made by stitching 10 triangular pieces of cloth of two different colour, each piece measuring 20 cm, 50 cm and 50 cm. How much cloth of each colour is required for the umbrella?

Watch Video Solution

6. A floral design on the floor of a building consists of 280 tiles. Each tile is in the shape

of a parallelogram of altitude 3 cm and base 5 cm. Find the cost of polishing the design at the rate of 50 paise per cm^2 .

Watch Video Solution

7. The triangular side walls of a flyover have been used for advertisements. The sides of the walls are $13\ m$, $14\ m$ and $15\ m$. The advertisements yield an earning of rupee 2000 per m^2 a year. A company hired one of its walls for 6 months. How much rent did it pay?

Watch Video Solution

8. How much paper of each shade is needed to make a kite given in figure, in which ABCD is a square with diagonal 44 cm.

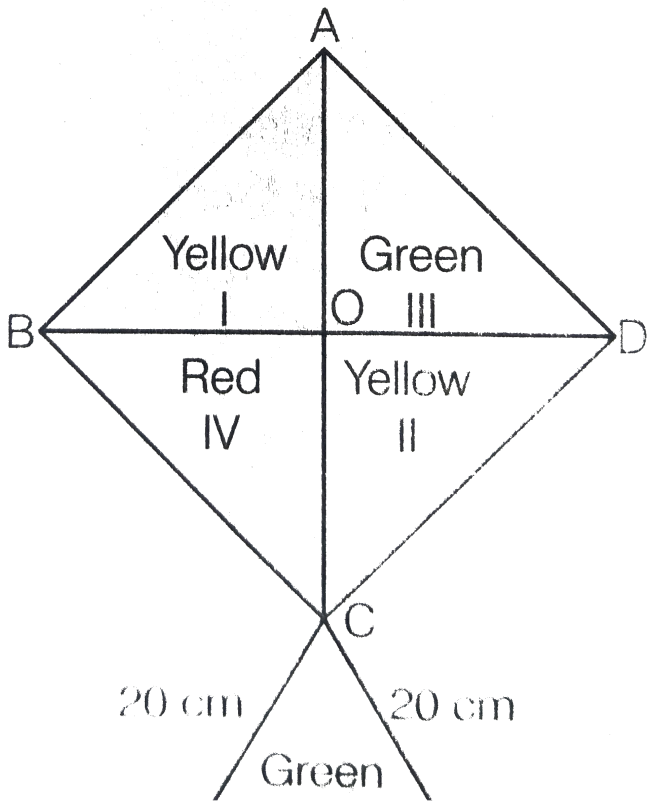

Watch Video Solution

9. In figure, $\triangle ABC$ has sides $AB = 7.5\ cm$, $AC = 6.5\ cm$ and $BC = 7\ cm$. On base BC a parallelogram $DBCE$ of same area as that of $\triangle ABC$ is constructed. Find the height DF of the parallelogram.

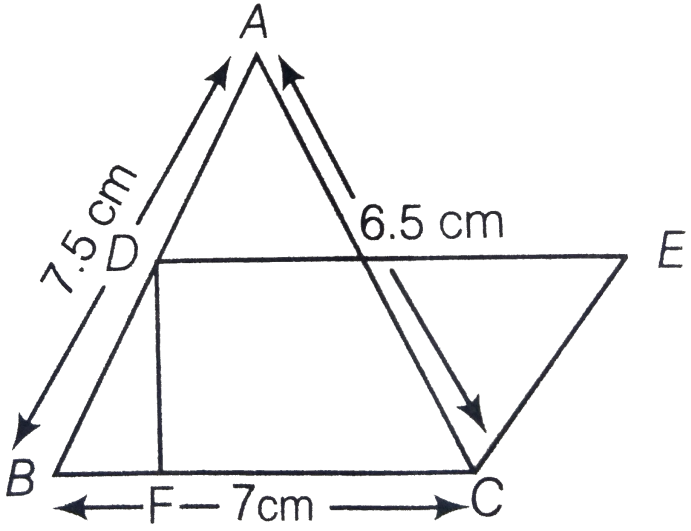

Watch Video Solution

10. A design is made on a rectangular tile of dimensions $50\text{ cm} \times 70\text{ cm}$ as shown in figure. The design shows 8 triangle, each of sides 26 cm, 17 cm and 25 cm. Find the total area of

the design and the remaining area of the tiles.

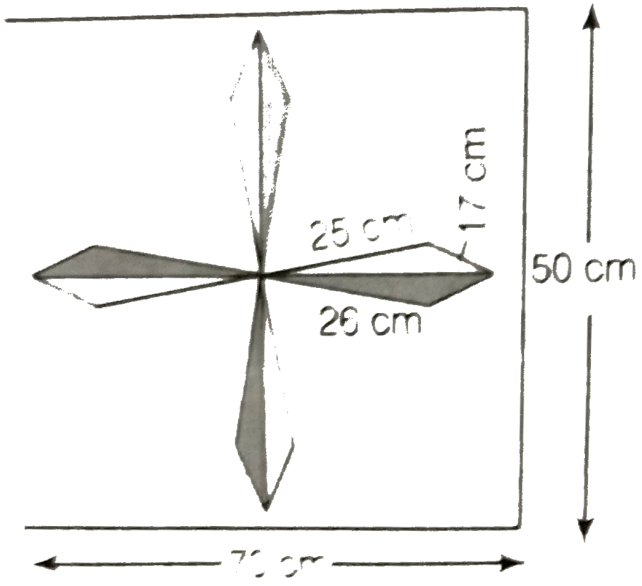

Watch Video Solution

Exercise 12a

1. Find the area of a triangle whose sides are 12 cm, 16 cm and 20 cm.

Watch Video Solution

2. Find the area of a triangle whose sides are 18 cm, 24 cm and 30 cm.

Also, find the length of altitude corresponding to the larger side of the triangle.

Watch Video Solution

3. Find the area of an equilateral triangle whose side is a cm.

Watch Video Solution

4. The length of the sides of a triangle are in the ratio $3:4:5$. Find the area of the triangle if its perimeter is 144 cm.

Watch Video Solution

5. The area of an equilateral triangle is numerically equal to its perimeter. Find the length of its side correct to two decimal place.

Watch Video Solution

6. The perimeter of an isosceles triangle is 40 cm. The base is two-third of the sum of equal sides. Find the area of the triangle .

Watch Video Solution

7. Find the percentage increase in the area of a triangle if its each side is doubled.

Watch Video Solution

8. The given figure shows an equilateral triangle ABC whose side is 10 cm and a right-angled BDC inside it, whose side BD = 8 cm and $\angle D = 90^\circ$. Find the area of the shaded

portion.

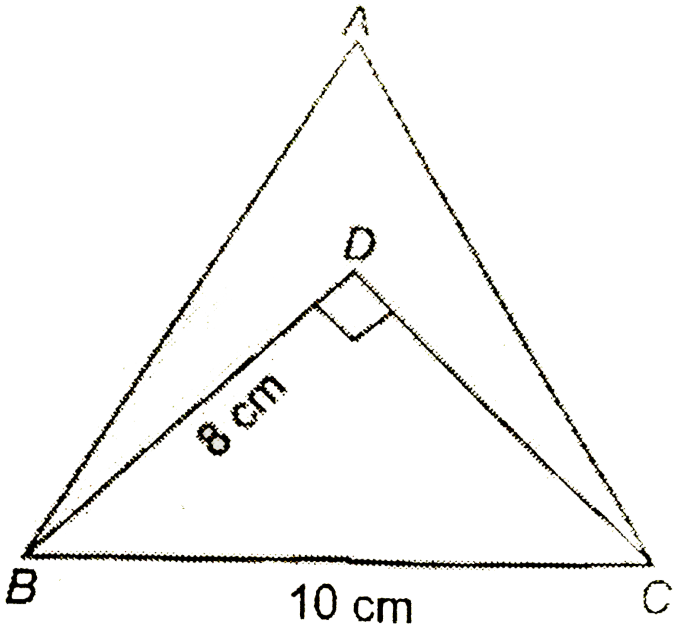

Watch Video Solution

9. In the given figure $\angle ACD = 90^\circ$

Ad=15 cm, DC=12 cm, AB=7 cm and BC=6 cm

Find the are of the shaded region.

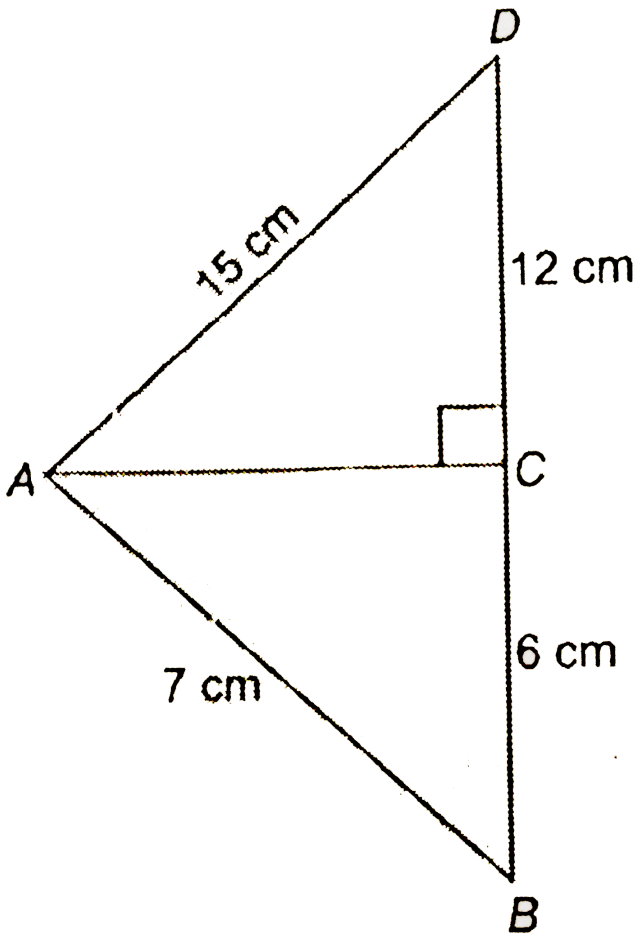

Watch Video Solution

10. The side of an equilateral triangle is $6\sqrt{3}$ cm. Find the area of the triangle. [Take $\sqrt{3} = 1.732$]

Watch Video Solution

11. Find the area of a triangular field whose equal sides are 17 m, 15 m, and 8 m respectively . If a labour can plough $12m^2$ field in 1 day and gets Rs. 600 per day. Find the total labour charge he received for ploughing the field .

Watch Video Solution

Exercise 12b

1. Find the area of a quadrilateral one of whose diagonal, is 25 cm long and the perpendicular from the other two vertices to this diagonal are 10 cm and 12 cm.

Watch Video Solution

2. The side of a rhombus is 15cm. If its one diagonal is 18 cm. Find its area.

Watch Video Solution

3. Two adjacent sides of a parallelogram are 10 cm and 12 cm. If its one diagonal is 14 cm long, find the area of the parallelogram.

Watch Video Solution

4. The perimeter of a rhombus is 52 cm. If its one diagonal is 10 cm, find using Heron's formula the area of rhombus.

Watch Video Solution

5. Find the area of the given trapezium.

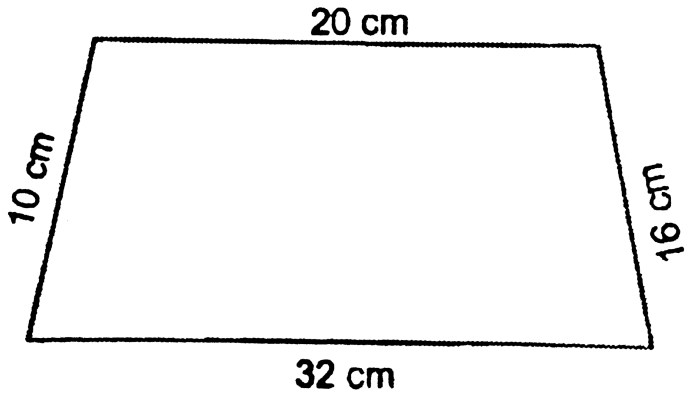

Watch Video Solution

6. Find the area of quadrilateral ABCD in which $\angle B = 90^\circ$, BC = 32 cm, AB = 24 cm and CD=DA = 25 cm.

Watch Video Solution

7. The given figure shows a trapezium ABCD in which AB = 17 cm, BC = 8 cm and CD = 15 cm.

Find the area and perimeter of the trapezium.

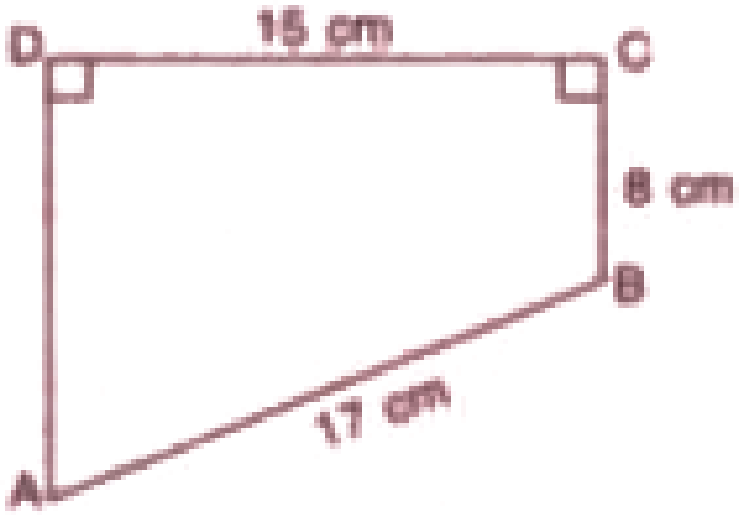

Watch Video Solution

8. Calculate the area of quadrilateral ABCD, in which $\angle ABD = 90^\circ$, triangle BCD is an

equilateral triangle of side 24 cm and AD = 26 cm.

Watch Video Solution

9. One side of a parallelogram is 10 cm. If its diagonals are 12 cm and 16 cm. Find the area of the parallelogram.

Watch Video Solution

10. The given figure shows a metal plate in the form of a trapezium. Calculate the area of the plate in sq. cm correct to one decimal plate.

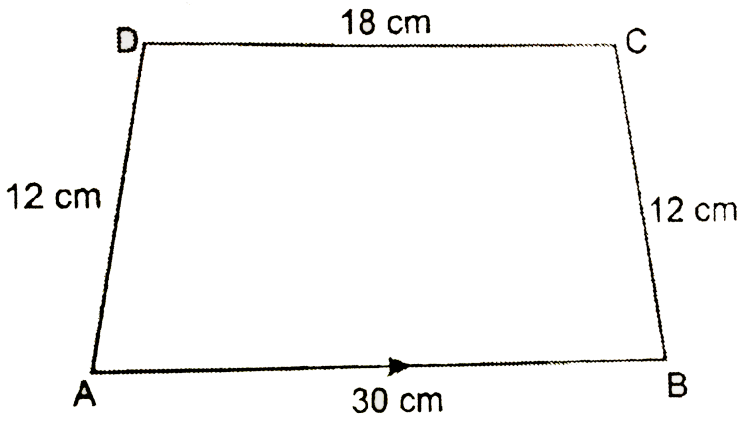

Watch Video Solution

Revision Exercise

1. The lengths of the three sides of a Δ are 3, 4 and 5 cm, respectively. Find its area.

Watch Video Solution

2. Each side of an equilateral triangle measure 10 cm. Find the area of the triangle .

Watch Video Solution

3. The base of an isosceles triangle is 16 cm. If both the equal sides be 17 cm each, find the

area of the triangle.

Watch Video Solution

4. The sides of a triangle are in the ratio 5 : 12 : 13 and its perimeter is 150 cm. Find the area of the triangle.

Watch Video Solution

5. Calculate the area of an equilateral triangle, whose height is 20 cm.

Watch Video Solution

6. Find the area of triangle whose sides are 17 cm, 8 cm and 15 cm. Also calculate the length of the altitude corresponding to the largest side of the triangle.

Watch Video Solution

7. Find the area of the trapezium given in adjoining figure.

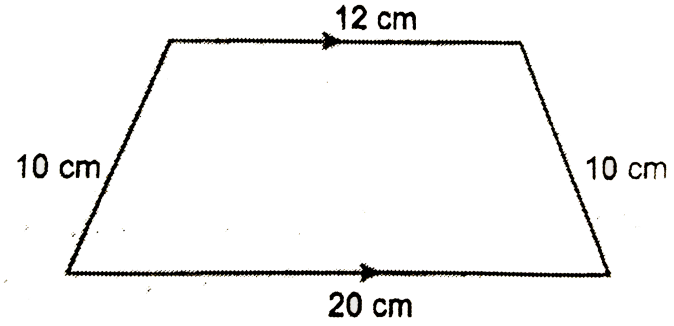

Watch Video Solution

8. A park is in the shape of quadrilateral ABCD in which AB = 9 cm, BC = 12 cm, CD = 5 cm, AD = 8 cm and $\angle C = 90^\circ$. Find the area of the park.

Watch Video Solution

9. Find the area of a parallelogram ABCD in which AB = 8 cm, BC = 15 cm and diagonal AC = 17 cm.

Watch Video Solution

10. Find the area of the trapezium given in given figure.

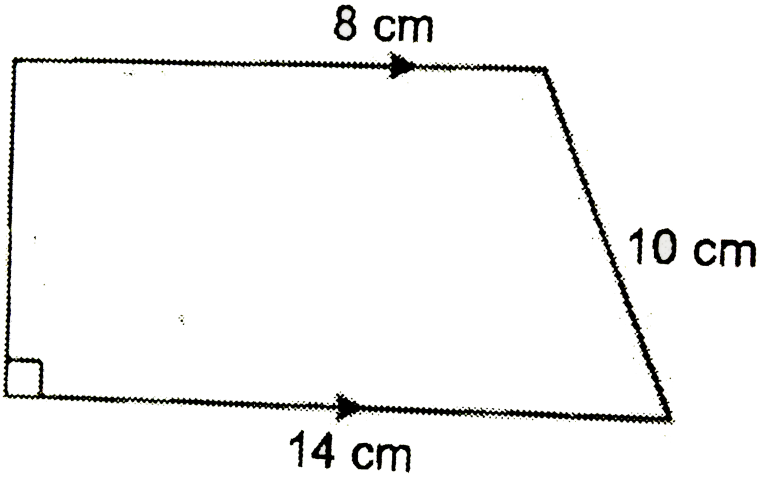

Watch Video Solution

11. Find the area of the given figure

Given AB = 18 cm, BC = 7 cm, CD = 20 cm, DE = 8 cm, EA = 17 cm, AF = 30 cm, BF = 24 cm, CF = 25

cm, FD = 15 cm, EF = 17 cm.

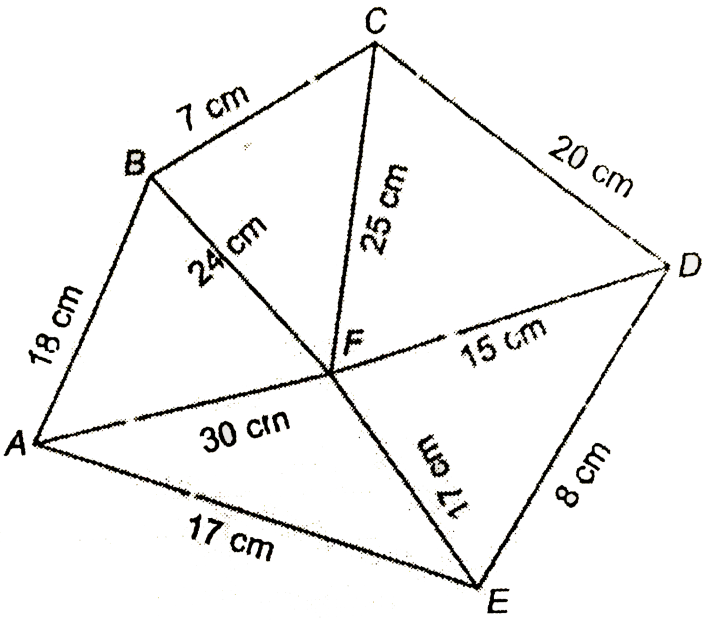

Watch Video Solution