CHEMISTRY

BOOKS - EVERGREEN CHEMISTRY (ENGLISH)

ELECTROLYSIS

Questions

1. State any two differences between a strong electrolyte and a weak electrolyte .

Watch Video Solution

2. You are provided with two aqueous solutions X and Y of equal molar concentrations . How will you test which one contains strong electrolyte and which one contains weak electrolyte ?

Watch Video Solution

3. The electrical conductivity of acetic acid is less than of sulhuric acid of the same concentration .Give reason .

Watch Video Solution

4. Carbon tetrachloride does not conduct electricity . Give reason .

Watch Video Solution

5. Three different elctrolytic cells A, B and C are connected in separate circuits .Electrolytic cell A contains sodium chloride solution. When the circuit is complete . A bulb in the circuit glows brightly .electrolytic cell B contains acetic acid solution and in this case the bulb in the circuit glows dimly . The elctrolytic cell C contains sugar solution and the bulb does not glow . Give a reason for each of these observations .

Watch Video Solution

6. Here is an electrode reactin :

$$Cu \rightarrow Cu^{2+} + 2e$$

At which electrode (anode or cathode) would such a reaction take place ? Is this an example of oxidation or reduction ?

Watch Video Solution

7. A solution contains magnesium ions (Mg^{2+}) , iron (II) ,ions (Fe^{2+}) and copper ions (Cu^{2+}) .On passing an elctric curent through this soolution , which ions will be the

first to be discharged at the cathode ? Write the equation for the cathode reaction .

Watch Video Solution

8. Why is carbon tetrachloride , which is a liquid , a nonelectrolyte ?

Watch Video Solution

9. Identify the following reactions as either oxidation or reduction :

$O + 2e \rightarrow O^{2-}$

Watch Video Solution

10. Identify the following reactions as either oxidation or reduction :

$K - e^{-} \rightarrow K^{+}$

Watch Video Solution

11. Identify the following reactions as either oxidation or reduction :

$Fe^{3+} + e^- \rightarrow Fe^{2+}$

Watch Video Solution

12. Electrons are added to an element Y .

Is Y oxidised or reduced ?

Watch Video Solution

13. Electrons are added to an element Y .

What charge will Y have after the addition of electrons ?

Watch Video Solution

14. Electrons are added to an element Y .

Which electrode will Y migrate to during the process of electrolysis ?

Watch Video Solution

15. A compound which liberates reddish brown gas around the anode during electrolysis in its molten state is

(a) Sodium chloride

(b) Copper (II) oxide

(c) Lead (II) bromide

(d) Copper (II) sulphate

A. Sodium chloride

B. Copper (II) oxide

C. Lead (II) bromide

D. Copper (II) sulphate

Answer: C

Watch Video Solution

16. During the electrolysis of molten lead bromide , which of the following takes place ? Bromine is released at the cathode Lead is deposited at the anode Bromine ions gain electrons Lead is deposited at the cathode

A. Bromine is released at the cathode

B. Lead is deposited at the anode

C. Bromine ions gain electrons

D. Lead is deposited at the cathode

Answer: D

Watch Video Solution

17. What is observed when fused lead bromide is electrolysed using platinum electrodes ?

A. A silver grey deposit at anode , and a reddish brown deposit at cathode .

B. A silver grey deposit at cathode , and a blue deposit at anode .

C. A silver grey deposit at cathode , and a reddish brown vapour brown vapour at anode .

D. A silver grey vapour at cathode , and a reddish brown vapour at anode .

Answer: C

Watch Video Solution

18. Give appropriate scientific reasons for the following statements :

During electrolysis of molten lead bromide, graphite anode is preferred to other electrodes

Watch Video Solution

19. Electrolysis of molten lead bromide is considered as redox reaction . Give reason .

Watch Video Solution

20. Fill in the blanks :

The (higher/lower)..... the concentration of an ion in a solution, the greater is the probability of its being discharged at its appropriate electrode.

Watch Video Solution

21. Which ion moves towards the cathode ?

Watch Video Solution

22. What is the product at the anode ?

Watch Video Solution

23. Select the ion in each case , that would get slectively discharged from the aqueous mixture of ions listed below .

SO_4^{2-} , NO_3^- and OH^-

Watch Video Solution

24. Select the ion in each case , that would get slectively discharged from the aqueous mixture of ions listed below .

Pb^{2+}, Ag^{+} and Cu^{2+}

Watch Video Solution

25. Name the product formed during the electrolysis of acidfied water using platinum elctrodes .

Watch Video Solution

26. Write the equations of the reactions which take place at the cathode and anode when acidified water is elctrolysed .

Watch Video Solution

27. Give reasons as to why:

the electrolysis of acidulated water is considered to be an example of catalysis.

Watch Video Solution

28. Differentiate between electrical conductivity of copper sulphate solution and copper metal .

Watch Video Solution

29. Write the equations for the reactions taking place at the two electrodes (mentioning clearly the name of the electrode) during the electrolysis of

Acidified copper sulphate solution with copper

electrodes .

(ii) Molten lead bromide with (graphite) electrodes .

Watch Video Solution

30. The electrolyte for the electroplating an article with silver is

A. Silver nitrate solution

B. Silver cyanide solution

C. Sodium argentocyanide solutions

D. Silver acetate

Answer: C

Watch Video Solution

31. A solution of silver nitrate $(AgNO_3)$ is not used as electrolyte for the electrodeposition of silver on an object . Give reason .

Watch Video Solution

32. Name the metallic ions that should be present in the electrolyte when an article of copper is to be electroplated with silver .

Watch Video Solution

33. A student wants to electroplate his/her key chain with nickel to prevent rusting . For this electroplating : Name the electrolyte Name the cathode Name the anode Give the reaction at the anode .

A. Name the electrolyte

B. Name the cathode

C. Name the anode

D. Give the reaction at the anode .

Answer:

Watch Video Solution

34. From the list - Ammonia, Copper oxide ,Copper sulphate , Hydrogen chloride ,

Hydrogen sulphide , Lead bromide - select the compound which can be oxidied to chlorine .

Watch Video Solution

35. Select from the list - Ammonia , Copper oxide ,Copper sulphate ,Hydrogen chloride,Hydrogen sulphide , Lead bromide :The compound which is not a metal hydroxide but its aqueous solution is alkaline in nature .

Watch Video Solution

36. State relevant observations for the following:

When copper sulphate solution is electrolyzed by using a platinum electrode.

Watch Video Solution

37. An electrode 'A' is connected to the positive terminal of a battery and electrode 'B' to the negative terminal.

Give the names of the electrodes A & B.

Watch Video Solution

38. Which electrode : anode or cathode is the oxidising electrode ? Why?

Watch Video Solution

39. Write the equations of the reactions which take place at the cathode and anode when acidified water is electrolysed.

Watch Video Solution

40. A soln. of Ag NO_3 is a good electrolyte but is not used for electroplating an article with silver. Why

Watch Video Solution

41. Choose A,B,C or D match the descriptions (i) to (iv) alphabets may be repeated .

(A) nonelectrolyte (B) strong elestrolyte (C) weak electrolyte (D) metallic conductor

(i) Molten ionic compound

(ii) Carbon tetrachloride

(iii) An aluminium wire (iv) A solution containing solvent molecules , solute molecules and ions formed by the dissociation of solute molecules .

(v) A sugar solution with sugar molecules and water molecules .

Watch Video Solution

42. During the electrolysis of molten lead bromide :

A. Bromine is released at the cathode

B. Lead is deposited at the anode

C. Bromine ions gain electrons

D. Lead is deposited at the cathode

Answer:

Watch Video Solution

43. Here is an electrode reaction

$$Cu \rightarrow Cu^{2+} + 2e^{-}$$

At which electrode (anode or cathode) would

such a reaction take place ? Is this an example of oxidation or reduction.

Watch Video Solution

44. A solution contains magnesium ions (Mg^{2+}) ,iron (II) ions (Fe^{2+}) and copper ions (Cu^{2+}). On passing an electric current through this solution which ions will be the first to be discharged at the cathode? Write the equation for the cathode reaction

Watch Video Solution

45. A] Sulphur B] Silver chloride C] Hydrogen chloride D] Copper [II] Sulphate E] Graphite. State which from A to E fits the description - 'A pink metal is deposited at the cathode during the electrolysis of the soln, of this salt '

Watch Video Solution

46. The aqueous solution of the following compounds which contains both ions and molecules is

A. Sulphuric acid

B. Hydrochloric acid

C. Nitric acid

D. Acetic acid

Answer:

Watch Video Solution

47. Rewrite the following by inserting appropriate word / words:

Lead bromide conducts electricity.

Watch Video Solution

48. A metal article is to be electroplated with silver. The electrolyte selected is sodium argentocyanide.

What kind of salt is sodium argentocyanide?

Watch Video Solution

49. A metal article is to be electroplated with silver. The electrolyte selected is sodium

argentocyanide.

Why is it preferred to silver nitrate as an electrolyte?

Watch Video Solution

50. A metal article is to be electroplated with silver. The electrolyte selected is sodium argentocyanide.

State one condition to ensure that the deposit is smooth, firm and long lasting.

Watch Video Solution

51. A metal article is to be electroplated with silver. The electrolyte selected is sodium argentocyanide.

Write the reaction taking place at the cathode.

Watch Video Solution

52. A metal article is to be electroplated with silver. The electrolyte selected is sodium argentocyanide.

Write the reaction taking place at the anode.

Watch Video Solution

53. Aqueous solution of Nickel sulphate contains Ni^{2+} and SO_4^{2-} ions.

Which ion moves towards the cathode?

Watch Video Solution

54. Aqueous solution of Nickel sulphate contains Ni^{2+} and SO_4^{2-} ions.

What is the product at the anode ?

Watch Video Solution

55. A compound which liberates reddish brown gas around the anode during electrolysis in its molten state is

(a) Sodium chloride

(b) Copper (II) oxide

(c) Lead (II) bromide

(d) Copper (II) sulphate

A. Sodium chloride

B. Copper [II] oxide,

C. Copper [II] sulphate

D. Lead [II] bromide

Answer:

Watch Video Solution

56. During electroplating of an article with nickel - i] Name **a] The electrolyte b] The cathode c] The anode**

ii] Give the reaction of the electrolysis at a] The cathode b] The anode

Watch Video Solution

57. Three different electrolytic cells A, B and C are connected in separate circuits. Electrolytic cell A contains sodium chloride solution. When the circuit is completed, a bulb in the circuit glows brightly. Electrolytic cell B contains acetic acid solution and in this case the bulb in the circuit glows dimly. The electrolytic cell C contains sugar solution and the bulb does not glow. Give a reason for each of these observations.

Watch Video Solution

58. The electrolysis of acidulated water is considered to be an example of catalysis . Give reason .

Watch Video Solution

59. What would you observe at the (a) cathode (b) anode ?

Watch Video Solution

60. Differentiate between electrical conductivity of copper sulphate solution and copper metal.

Watch Video Solution

61. Some word/words are missing in the following statement. You are required to rewrite the statement in the correct form using the appropriate word/words:

Cations migrate during electrolysis.

Watch Video Solution

62. Identify the weak electrolyte from the following:

(A) Sodium chloride solution

(B) Dilute hydrochloric acid

(C) Dilute sulphuric acid

(D) Aqueous acetic acid

A. Sodium chloride soln

B. Dulite hydrochloric acid

C. Dilute sulphuric acid

D. Aq. acetic acid

Answer:

Watch Video Solution

63. Match the following in column A with the correct answer form the choices given in column B:

Column A: 1. Ammonium hydroxide soln., 2. Dilute hydrochloric acid, 3. Carbon tetrachloride

Column B: A:Contains only ions, B: Contains only molecules, C: Contains ions & molecules

Watch Video Solution

64. Give reasons for the following: An aqueous solution of sodium chloride conducts electricity.

Watch Video Solution

65. Select the correct answer from the list given in brackets :

An aqueous electrolyte consists of the ions mentioned in the list, the ion which could be discharged most readily during electrolysis.

$[Fe^{2+}, Cu^{2+}, Pb^{2+}, H^{+}]$

Watch Video Solution

66. Select the correct answer from the list given in brackets :

The metallic electrode which does not take part in an electrolytic reaction. (Cu, Ag, Pt, Ni).

Watch Video Solution

67. Select the correct answer from the list given in brackets :

The ion which is discharged at the anode during the electrolysis of copper sulphate solutions using copper electrodes as anode and cathode. $[Cu^{2+}, OH^{-} SO_4^{2-}, H^{+}]$

Watch Video Solution

68. Select the correct answer from the list given in brackets :

When dilute sodium chloride is electrolysed using graphite electrodes, the cation is discharged at the cathode most readily. $[Na^+, OH^-, H^+, Cl^-]$.

Watch Video Solution

69. Select the correct answer from the list given in brackets :

During silver plating of an article using potassium argentocyanide as an electrolyte, the anode material should be (Cu, Ag, Pt, Fe).

Watch Video Solution

70. State one appropriate observation for each of the following: Electricity is passed through molten lead bromide.

Watch Video Solution

71. Which of these will act as a non-electrolyte?

A. Liquid carbon tetrachloride

B. Acetic acid

C. Sodium hydroxide aqueous solution acid

D. Potassium chloride aqueous solution.

Answer:

Watch Video Solution

72. Copper sulphate soln. is electtrolysed using copper electrodes as seen in diagram . Which electrode to your left or right is known as the oxidising electrode & why ?

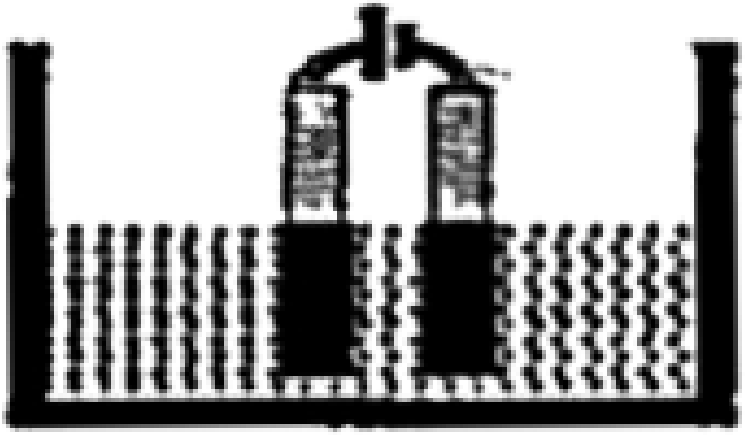

Watch Video Solution

73. Copper sulphate solution is electrolysed using copper electrodes. Study the diagram given below and answer the question that follows:

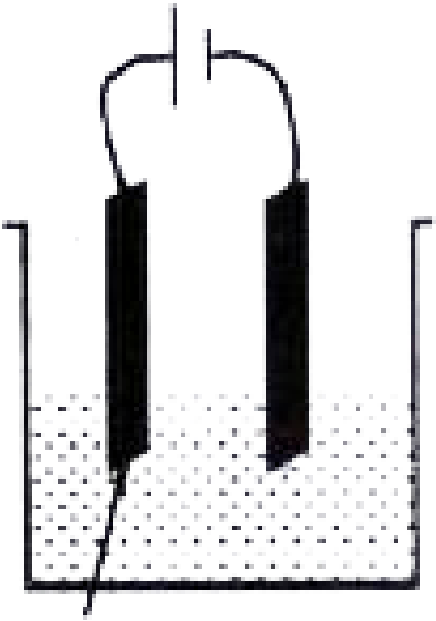

Copper (II) Sulphate Solution

Write the equation representing the reaction that occurs.

Watch Video Solution

74. Copper sulphate soln. is electrolysed using copper electrodes as seen in diagram . State two appropriate observations for the

above electrolysis reaction

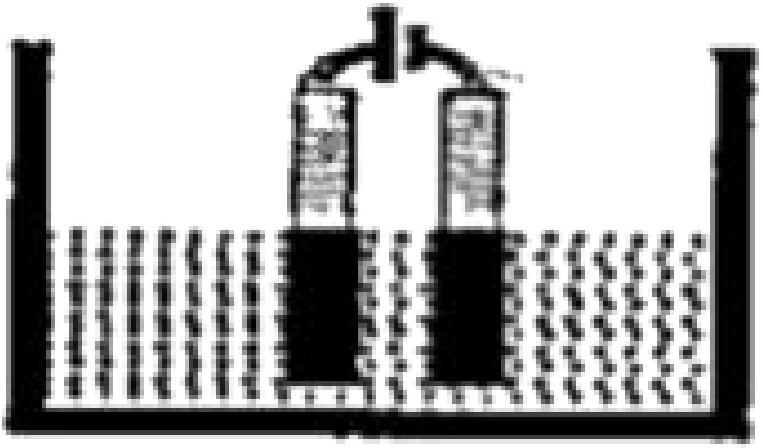

Watch Video Solution

75. Identify the following substance :

A gas which does not conduct electricity in the liquid state but conducts electricity when dissolved in water.

Watch Video Solution

76. When fused lead bromide is electrolysed we observe: [A]a silver grey deposit at anode and a reddish brown deposit at cathode; [B] a silver grey deposit at cathode and a reddish brown deposit at anode; [C] a silver grey deposit at cathode and reddish brown fumes at anode ; [D] silver grey fumes at anode and reddish brown fumes at cathode

A. a silver grea deposit at anode & a reddish brown deposit at cathode

B. a silver grey deposit at cathode & a reddish brown deposit at anode

C. a silver grey deposit at cathode & reddish brown fumes at anode

D. silver grey fumes at anode & reddish brown fumes at cathode

Answer:

Watch Video Solution

77. During electroplating an article with silver, the electrolyte used is :

A. silver nitrate solution

B. silver cyanide solution

C. sodium argentocyanide solution

D. nickel sulphate solution

Answer:

Watch Video Solution

78. Give one word or phrase for the following: Electrolytic deposition of a superior metal on a baser metal.

Watch Video Solution

79. At the cathode when acidified aqueous copper sulphate solution is electrolysed with copper electrodes .

Watch Video Solution

80. Which phenomenon takes place at Anode? (Oxidation/reduction)

Watch Video Solution

81. Name the kind of particles present in Sodium Hydroxide solution.

Watch Video Solution

82. Name the kind of particles present in Carbonic acid.

Watch Video Solution

83. Name the kind of particles present in Sugar solution.

Watch Video Solution

84. M is a metal above hydrogen in the activity series and its oxide has the formula M_2O. This oxide when dissolved in water forms the corresponding hydroxide which is a good conductor of electricity. In the above context answer the following:

State the reaction taking place at the cathode.

Watch Video Solution

85. M is a metal above hydrogen in the activity series and its oxide has the formula M_2O. This oxide when dissolved in water forms the corresponding hydroxide which is a good conductor of electricity. In the above context answer the following:

Name the product at the anode.

Watch Video Solution

86. State one relevant observation for each of the following: At the Anode when aqueous copper sulphate solution is electrolysed using copper electrodes.

Watch Video Solution

87. Give appropriate scientific reasons for the following statements :

During electrolysis of molten lead bromide,

graphite anode is preferred to other electrodes

Watch Video Solution

88. Which phenomenon takes place at Cathode? (Oxidation/Reduction)

Watch Video Solution

89. Give appropriate scientific reasons for the following statements :

Electrolysis of molten lead bromide is considered to be a redox reaction.

Watch Video Solution

90. Differentiate between the terms strong electrolyte and weak electrolyte. (stating any two differences)

Watch Video Solution

91. During the purification of copper by electrolysis:

(a)the anode used is made of copper ore

(b)pure copper is deposited on the cathode

(c)the impurities such as Ag, Au present in solution as ions

(d)concentration of $CuSO_4$ solution remains constant during dissolution of Cu

Watch Video Solution

92. For the electro-refining of copper

Write the reaction that takes place at the anode.

Watch Video Solution

93. The particles present in strong electrolytes are

A. only molecules

B. mainly ions

C. ions & molecules

D. only atoms

Answer:

Watch Video Solution

94. Write equations for the reactions taking place at the two electrodes (mentioning clearly the name of the electrode) during the electrolysis of:

Acidified copper sulphate solution with copper electrodes.

Watch Video Solution

95. State the observations at the anode and at the cathode during the electrolysis of :

fused lead bromide using graphite electrodes.

Watch Video Solution

96. Name the product formed at the anode during the electrolysis of acidified water using platinum electrodes.

Watch Video Solution

97. Name the metallic ions that should be present in the electrolyte when an article made of copper is to be electroplated with silver.

Watch Video Solution

98. Give reasons why :

Sodium chloride will conduct electricity only in fused or aqueous solution state.

Watch Video Solution

99. Give reasons why :

In the electroplating of an article with silver, the electrolyte sodium argentocyanide solution is preferred over silver nitrate solution.

Watch Video Solution

100. Give reasons why :

Although copper is a good conductor of electricity, it is a non-electrolyte.

Watch Video Solution

101. The electrolyte used for electroplating an article with silver is :

Watch Video Solution

102. Identify the substance underlined in the following case :

The $\underline{\text{particles}}$ present in a liquid such as kerosene, that is a non electrolyte.

Watch Video Solution

103. State the observations at the anode and at the cathode during the electrolysis of :

fused lead bromide using graphite electrodes.

Watch Video Solution

104. State the observations at the anode and at the cathode during the electrolysis of : copper sulphate solution using copper electrodes.

Watch Video Solution

105. Select the ion in each case , that would get slectively discharged from the aqueous

mixture of ions listed below .

$SO_4^{2-}, NO_3^- \text{ and } OH^-$

Watch Video Solution

106. Select the ion in each case, that would get selectively discharged from the aqueous mixture of the ions listed below:

$Pb^{2+}, Ag^+ \text{ and } cu^{2+}$

Watch Video Solution

107. The electrolysis of acidified water is an example of:

A. Reduction

B. Oxidation

C. Redox reaction

D. Synthesis

Answer:

Watch Video Solution

108. State one relevant observation for the following: At the anode, when molten lead bromide is electrolyzed using graphite electrodes.

Watch Video Solution

109. Give a reason for the following :

Conductivity of dilute hydrochloric acid is greater than that of acetic acid.

Watch Video Solution

110. Name the product formed at the anode during the electrolysis of acidified water using platinum electrodes.

Watch Video Solution

111. Fill up the blank with the correct choice given in bracket. Electrolysis of aqueous sodium chloride solution will form _____ at the cathode. (hydrogen gas/sodium metal)

Watch Video Solution

112. Complete the following table which refers to the conversion of ions to neutral particles.

Conversion	Ionic Equation	Oxidation/ Reduction
Chloride ion to chlorine molecule	(i) _____	(ii) _____
Lead (II) ion to lead	(iii) _____	(iv) _____

Watch Video Solution

113. For the electro-refining of copper

What is the cathode made-up of ?

Watch Video Solution

114. For the electro-refining of copper

Write the reaction that takes place at the anode.

Watch Video Solution

115. Choose the correct answer from the options given below

An electrolyte which completely dissociates into ions is :

A. Alcohol

B. Carbonic acid

C. Sucrose

D. Sodium hydroxide

Answer:

Watch Video Solution

116. State one relevant observation for each of the following: At the Anode when aqueous copper sulphate solution is electrolysed using copper electrodes.

Watch Video Solution

117. Arrange according to the instructions given in bracket:

$Mg^{2+}, Cu^{2+}, Na^{+}, H^{+}$ (In the order of preferential discharge at the cathode)

Watch Video Solution

118. The particles present in strong electrolytes are

Watch Video Solution

119. Name the particles present in :

Weak Electrolyte: Acetic acid

Watch Video Solution

120. Name the particles present in :

Weak Electrolyte: Acetic acid

Watch Video Solution

Questions Fill In The Blanks

1. As we descend the electrochemical series containing cations , the tendency of the cations to get _____ at the cathod increases .

Watch Video Solution

Questions For Practice

1. Pure water consits almost entirely of _____ (ions/molecules).

Watch Video Solution

2. We can expect that pure water _____ normally conduct electricity . (will /will not)

Watch Video Solution

3. Give two examples each of strong and weak electrolytes .

Watch Video Solution

4. What type of particles compose a nonelectrolyte ?

Watch Video Solution

5. If an electrolyte is described as strong electrolyte what does this mean ?

Watch Video Solution

6. From the aqueous solutions of NaCl , HCl(g), $NH_3, H_2O, CO_2, MgCl_2, C_6H_{12}O_6$ select The substances containing ions only .

Watch Video Solution

7. From the aqueous solutions of NaCl , HCl(g), $NH_3, H_2O, CO_2, MgCl_2, C_6H_{12}O_6$ select The substances containing molecules only .

Watch Video Solution

8. From the aqueous solutions of NaCl , HCl(g), $NH_3, H_2O, CO_2, MgCl_2, C_6H_{12}O_6$ select The substances containing both molecules and ions.

Watch Video Solution

9. Classify the following substances under the headings strong electrolytes , weak electrolytes and nonelectrolytes .

Watch Video Solution

10. Choose A,B,C or D match the descriptions (i) to (iv) alphabets may be repeated .

(A) nonelectrolyte (B) strong elestrolyte (C) weak electrolyte (D) metallic conductor

(i) Molten ionic compound

(ii) Carbon tetrachloride

(iii) An aluminium wire (iv) A solution containing solvent molecules , solute molecules and ions formed by the dissociation of solute molecules .

(v) A sugar solution with sugar molecules and water molecules .

Watch Video Solution

11. Copper is a good conductor of electricity but it is not considered as an electrolyte .Why ?

Watch Video Solution

12. The particles present in strong electrolytes are

A. only molecules

B. mainly ions

C. ions ad molecules

D. only atoms

Answer: B

Watch Video Solution

13. Identify the weak electrolyte from the following:

(A) Sodium chloride solution

(B) Dilute hydrochloric acid

(C) Dilute sulphuric acid

(D) Aqueous acetic acid

A. Sodium chloride solution

B. Dilute hydrochloric

C. Dilute sulphuric

D. Aqueous acetic acid

Answer: D

Watch Video Solution

14. Which one is a nonelectrolyte ?

A. Liquid carbon tetrachloride

B. Acetic acid

C. Sodium hydroxide solution

D. Potassium chloride

Answer: A

Watch Video Solution

15. Sulphuric acid is added to carrry out electrolysis of water . How does the addition of sulphuric acid produce a conducting solution ?

Watch Video Solution

16. Copy and complete the following sentences :

With platinum electrodyes , hydrogen is liberated at the _____ and oxygen at the

_____ during the electrolysis of acidified water

:

Watch Video Solution

17. When the electrolysis of acidified water is carried out :

(a) What is the ratio of the volume of hydrogen produced to the volume of oxygen ? Give the equation for the discharge of ions at the two electrodes .

Watch Video Solution

18. What are the main products of electrolysis of molten lead bromide ? Name the eletrodes at which each product is produced .

Watch Video Solution

19. Write two points difference between . Fused lead bromide and hot aqueous solution of lead bromide .

Watch Video Solution

20. Molten sodium chloride and sodium chloride dissolved in water .

Watch Video Solution

21. An electrolyte and a nonelectrolyte .

Watch Video Solution

22. A strong electrolyte and a week electrolyte .

Watch Video Solution

23. Which cation in the given pair will be discharged first during electrolysis under similar conditions ?

H^+ and Cu^{2+}

Watch Video Solution

24. Which cation in the given pair will be discharged first during electrolysis under

similar conditions ?

Cu^{2+} and Ag^{+}

Watch Video Solution

25. Which cation in the given pair will be discharged first during electrolysis under similar conditions ?

Na^{+} and Mg^{2+}

Watch Video Solution

26. Which cation in the given pair will be discharged first during electrolysis under similar conditions ? Fe^{2+} and Cu^{2+}

Watch Video Solution

27. Which cation in the given pair will be discharged first during electrolysis under similar conditions ? H^{+} and Na^{+}

Watch Video Solution

28. Which cation in the given pair will be discharged first during electrolysis under similar conditions ? Fe^{2+} and Zn^{2+}

Watch Video Solution

29. During an electrolysis , the cations are discharged at cathode .This is called reduction Name two cations which will not be reduced in the presence of hydrogen ions .

Watch Video Solution

30. During an electrolysis , the cations are discharged at cathode .This is called reduction Name one divalent cation and one monovalent cation which will be discharged in preference to hydrogen ions .

Watch Video Solution

31. During electrolysis of an aqueous solution of sulphuric acid between platinum electrodes , two types of anions migrate towards anode

but one of them is discharged (oxidised).

Name these two anions .

Watch Video Solution

32. During electrolysis of an aqueous solution of sulphuric acid between platinum electrodes , two types of anions migrate towards anode but one of them is discharged (oxidised).

Name the anion which is discharged at the anode .

Watch Video Solution

33. During electrolysis of an aqueous solution of sulphuric acid between platinum electrodes , two types of anions migrate towards anode but one of them is discharged (oxidised). Name of the main product of the discharge of anion at anode and write the anode reaction .

Watch Video Solution

34. During electrolysis of an aqueous solution of sulphuric acid between platinum electrodes,

two types of anions migrate towards anode but only one of them is discharged.

Name the product at the cathode and write the reaction.

Watch Video Solution

35. There is no change in the mass of H_2SO_4 during the elestrolysis of water which has been acidified with sulphuric acid . Illustrate giving reasons .

Watch Video Solution

36. During the electrolysis of dilute H_2SO_4 oxygen is liberated at anode . Give reason .

Watch Video Solution

37. Write separate equations for the reactions which take place at the two electrodes when dilute sulphuric acid is electrolysed between two platinum electrodes .

Watch Video Solution

38. When an aqeous solution of copper (II) sulphate is electrolysed between two copper electrodes , the blue colour ions are discharged and deposited as metallic copper at cathode . But the blue colour of the solution does not fade . Explain.

Watch Video Solution

39. The following questions refer to the electrolysis of copper sulphate solution using

copper electrodes .

Compare the change in the mass of the cathode with the change in the mass of the anode .

Watch Video Solution

40. What is seen to happen to the colour of the copper sulphate solution if platinum electrodes are used ? Explain this observation .

Watch Video Solution

41. What is the practical application of the electrolysis of copper sulphate solution ?

Watch Video Solution

42. During the electrolysis of copper (II) sulphate solution using platinum as cathode and carbon as anode :

What do you observe at the cathode and at the anode ?

Watch Video Solution

43. What change is noticed in the electrolyte ? During the electrolysis of copper (II) sulphate solution using platinum as cathode and carbon as anode:

Watch Video Solution

44. Write the reactions at the cathode and at the anode during electrolysis of copper sulphate using copper electrode.

Watch Video Solution

45. Mention two applications of electrolysis .

Watch Video Solution

46. Write the changes at the electrodes and in the cell during the purification of copper by electrolysis .

Watch Video Solution

47. Write the following components for the electrolytic refining of a piece of impure copper :

(i) The anode

Watch Video Solution

48. Write the following components for the electrolytic refining of a piece of impure copper :

(ii) The cathode.

Watch Video Solution

49. Write the following components for the electrolytic refining of a piece of impure copper :

(iii) The electrolyte .

Watch Video Solution

50. Define electroplating and write its main purpose .

Watch Video Solution

51. Name a technique which is emplyed for the decoration as well as protection of a metallic object .

Watch Video Solution

52. Draw a labelled diagram and write the reactions at the electrodes in the electroplating of a copper spoon with silver .

Watch Video Solution

53. Copy and Complete the following table which refers to two practical applications of electrolysis .

Process	Anode	Electrolyte	Cathode
(i) Silver plating a spoon		Solution of potassium argentocyanide	
(ii) Purification of copper			

Watch Video Solution

54. Give reasons for the following :

Why do metals deposit at the cathode and not

at the anode when their fused salts are electrolysed ?

Watch Video Solution

55. Why can we not use an aqueous solution of sodium chloride to isolate sodium metal by electrolysis ?

Watch Video Solution

56. Why is only molten salt used for the electrolysis of a very active metal like sodium or potassium ?

Watch Video Solution

57. A metal object is to be electroplated with silver .The electroplated with silver . The electrolyte selected is sodium argentocyanide . What type of salt is sodium argentocyanide ?

Watch Video Solution

58. A metal object is to be electroplated with silver .The electroplated with silver . The electrolyte selected is sodium argentocyanide . Why is it preferred to use silver nitrate as an electrolyte ?

Watch Video Solution

59. A metal object is to be electroplated with silver .The electroplated with silver . The electrolyte selected is sodium argentocyanide .

State one condition to ensure that the deposit is smooth , firm and long lasting .

Watch Video Solution

60. A metal object is to be electroplated with silver. The electrolyte selected is sodium argentocyanide .

Write the reaction taking place at the cathode .

Watch Video Solution

61. A metal object is to be electroplated with silver. The electrolyte selected is sodium argentocyanide .

Write the reaction taking place at the anode .

Watch Video Solution

62. Answer the following questions about eletroplating copper ware with silver .

What ions must be present in the electrolyte ?

Watch Video Solution

63. Of what must substances must the anode be made ?

View Text Solution

64. What will be made the cathode ?

Watch Video Solution

65. What is the equation for the reaction which takes place at the cathode ?

Watch Video Solution

Question For Practice On Examination Pattern

1. Electrolysis is a reaction caused of

A. light

B. heat

C. electricity

D. both heat and light

Answer: C

Watch Video Solution

2. Which one is an electrolyte ?

A. CH_4

B. $C_6H_{12}O_6$

C. $NaCl$

D. N_2C_4

Answer: C

Watch Video Solution

3. Which one will migrate towards anode in an electrolytic cell ?

A. Lead ion

B. Chloride ion

C. Potassium ion

D. Calcium ion

Answer: B

Watch Video Solution

4. Which one will not migrate towards cathode in an electrolytic cell ?

A. Lead ion

B. Chloride ion

C. Potassium ion

D. Calcium ion

Answer: B

Watch Video Solution

5. During the electrolysis of molten lead bromide :

A. lead ions are discharged at anode

B. bromine gas is liberated at cathode

C. lead are deposited at cathode

D. bromine ions are oxidised at cathode

Answer: C

Watch Video Solution

6. During the electrolysis of hot aqueous solution of lead bromide

(a) lead ions are discharged at cathode

(b) bromine gas is liberated at cathode

(c) lead is deposited at cathode

(d) hydrogen gas is liberated at cathode

A. lead ions are discharged at cathode

B. bromine gas is liberated at cathode

C. lead is deposited at cathode

D. hydrogen gas is liberated at cathode

Answer: D

Watch Video Solution

7. A metal object is to be electroplated with silver . The electrolyte selected is

A. silver nitrate

B. sodium argentocyanide

C. silver chloride

D. silver carbonate

Answer: B

Watch Video Solution

8. A knife is to be electroplated with nickel . The electrolyte selected is

A. nickel nitrate

B. nickel

C. nickel sulphate

D. nickel ammonium sulphate

Answer: D

Watch Video Solution

9. An aqueous solution of ethanoic acid contains

A. ions only

B. molecules only

C. a mixture of ions and molecules

D. glacial acetic acid

Answer: C

Watch Video Solution

10. During the electrolysis of water containing dilute sulphuric acid

A. sulphate ions are oxidised at anode and hydrogen ions are reduced at cathode .

B. hydrogen ions are oxidised at cathode and hydrogen ions are reduced at anode

.

C. hydrogen ions are reduced at cathode and hydroxide ions are oxidised at anode .

D. hydrogen gas is produced at anode and oxygen gas is produced at cathode .

Answer: C

Watch Video Solution

11. An aqueous solution contains H^+, Ag^+, Fe^{2+} and Zn^{2+} ions . The ion that will be reduced first at cathode is .

A. H^+

B. Ag^+

C. Fe^{2+}

D. Zn^{2+}

Answer: B

Watch Video Solution

12. On passing electricity through an acidified solution of copper (II) sulphate - A. hydrogen ions are reduced at cathode ; B. copper (II) ions are reduced at cathode ; C. copper (II) ions are oxidised at anode ; D. hydorgen gas liberates at cathode .

A. hydrogen ions are reduced at cathode .

B. copper (II) ions are reduced at cathode .

C. copper (II) ions are oxidised at anode .

D. hydorgen gas liberates at cathode .

Answer: B

Watch Video Solution

13. Which one of Na, Mg , Fe , and Cu has greater tendency to form ions?

A. Na

B. Mg

C. Fe

D. Cu

Answer: A

Watch Video Solution

14. Which one of Na, Mg , Fe , and Cu has least tendency to form ions ?

A. Na

B. Mg

C. Fe

D. Cu

Answer: D

Watch Video Solution

15. The electrolyte which is completely ionised in its aqueous solution is

(a) ethanoic acid

(b) hydrochloric acid

(c) ammonium hydroxide

(d) hydrogen sulphide

A. ethanoic acid

B. hydrochloric acid

C. ammonium hydroxide

D. hydrogen sulphide

Answer: B

Watch Video Solution

16. The elctrolyte which is partially ionised in its aqueous solution is

A. ethanoic acid

B. hydrochloric acid

C. ammonium chloride

D. potassium nitrate

Answer: A

Watch Video Solution

17. During the electrolysis of acidified solution of copper sulphate , the Cu^{2+} ions migrate towards _____ .

Watch Video Solution

18. Sodium chloride is a _____ electrolyte .

Watch Video Solution

19. In the eletroplating of an object with silver ,

_____ is selected as electrolyte .

Watch Video Solution

20. In aqueous solution , ethanoic acid is _____ ionised .

Watch Video Solution

21. During electrolysis of acidfied water , oxygen gas is produced at _____ .

Watch Video Solution

22. In the electrolysis refining of blister copper , a thin strip of pure copper is used as _____.

Watch Video Solution

23. In the presence of hydrogen ions , a zinc ion _____ reduced .

Watch Video Solution

24. In the presence of hydroxide ion, a sulphate ion _____ oxidised .

Watch Video Solution

25. Select odd one of with justification :

(i) NaCl , KCl , NaOH , NH_4OH

Watch Video Solution

26. $NH_4OH, NaOH, CH_3COOH, H_2S$

Watch Video Solution

27. NaOH is ?

Watch Video Solution

28. $CH_3OH, CH_4, NaOH, C_2H_5OH$

Watch Video Solution

29. $CH_3OH, CH_4, NaOH, C_2H_5OH$

Watch Video Solution

30. Match terms (A) cathode (B) anode (C) oxidation , (D) reduction (E) molten with its correct description as given (i) - (v)

It represents the liquid form of a solid substances .

Watch Video Solution

31. Cations migrate towards it .

Watch Video Solution

32. It is the reaction that converts a metal into its cation at anode .

Watch Video Solution

33. It is the discharge of a catin at cathode .

Watch Video Solution

34. It is the electrode at which oxidation takes place in an electrolytic cell .

Watch Video Solution

35. An aqueous electrolyte consits of the ions mentioned in the list , the ion which could be most readily discharged during electrolysis [A. Fe^{2+} B. Cu^{2+} C. Pb^{2+} D. H^{+}]

Watch Video Solution

36. Select the correct answer from the list given in brackets :

The metallic electrode which does not take part in an electrolytic reaction. (Cu, Ag, Pt, Ni).

Watch Video Solution

37. The ion which is discharged at the anode during the electrolysis of copper sulphate solution using platinum electrode as anode and cathode $\left[Cu^{2+}OH^{-}, SO_4^{2-}H^{+}\right]$

Watch Video Solution

38. Choose the correct option : When dilute sodium chloride solution is electrolysed using graphite electrodes , the cation is discharged at the cathode most readily $[Na^+, OH, H^+, Cl^-]$

Watch Video Solution

39. During silver plating of an article using potassium argentocyanide as electrolyte , the

anode material should be [Cu , Ag , Pt , Fe]

Watch Video Solution

Question

1. Give reasons for the following

The blue colour of aqueous copper sulphate fades when it is electrodes.

Watch Video Solution

2. Give reasons for the following

Lead bromide undergoes electrolytic dissociation in the molten state but is a non-electrolyte in the solid state.

Watch Video Solution

3. Give reasons for the following

In the electrolysis of acidified water dilute sulphuric acid is preferred to dilute nitric acid for acidification

Watch Video Solution

Work Sheet 1

1. Substances which conduct electric current without decomposing

Watch Video Solution

2. Substances which don't conduct electric current

Watch Video Solution

3. Degree of dissociation is represented by the letter

Watch Video Solution

4. Chemical elements having highest melting point

Watch Video Solution

5. Give one word for the

The force of attraction in ionic compounds

Watch Video Solution

6. Electrode where oxidation takes place

Watch Video Solution

7. Conversion of ions into neutral species is known as

Watch Video Solution

8. Electrodes connected to the negative pole of the battery

Watch Video Solution

9. Process of separation of ions of an ionic solid in solution

Watch Video Solution

10. The process by which a polar covalent compound is converted into ions in aqueous solution

Watch Video Solution

11. From the list given below, choose and write the correct examples : Ammonium hydroxide, wood, plastic, silver, copper, glucose, acetic acid, urea, hydrochloric acid, sodium chloride

solution

1. Insulators ⟶ _____, _____
2. Conductors ⟶ _____, _____
3. Strong electrolytes ⟶ _____, _____
4. Weak electrolytes ⟶ _____, _____
5. Non–electrolytes ⟶ _____, _____

Watch Video Solution

12. Explain the term degree of dissociation.

Watch Video Solution

13. Why solution of an electrolyte is electrically neutral ?

Watch Video Solution

14. Solid sodium chloride does not conduct electricity. Explain.

Watch Video Solution

15. Write the equations for the following reactions :

(i) dilute sulphuric acid and barium chloride

(ii) dilute sulphuric acid and sodium sulphide

(iii) sulphur dioxide and water.

Watch Video Solution

16. How does temperature affect the electrical conductivity of electrolytes ?

Watch Video Solution

17. Complete the following chart with respect to electrolysis of molten sodium chloride :

$$NaCl\ (m) \underset{}{\overset{\Delta}{\rightleftharpoons}} \underset{\text{Cation}}{\boxed{}} + \underset{\text{Anion}}{\boxed{}}$$

At Cathode

$$\boxed{} + 1e^- \longrightarrow \boxed{}$$

At Anode

$$\boxed{} - 1e^- \longrightarrow \boxed{} \qquad \text{(Primary change)}$$

$$\boxed{} + \boxed{} \longrightarrow \boxed{} \qquad \text{(Secondary change)}$$

Watch Video Solution

Work Sheet 2

1. Ion present ..... in the electrochemical series gets discharged at the relevant electrode in preference to ions ..... it.

Watch Video Solution

2. Electrodes that do not take part in electrolytic, reactions are known as ..... electrodes.

Watch Video Solution

3. Electrodes made of copper, nickel, silver are known as ..... electrodes.

Watch Video Solution

4. Electrolytic cell used for electrolysis of water is known as .....

Watch Video Solution

5. ..... gas is liberated at anode during electrolysis of water.

Watch Video Solution

6. The ions which migrate towards an electrode but remains unaffected are known as.....

Watch Video Solution

7. The ions which get deposited have ..... reduction potential.'

Watch Video Solution

8. Electrode at which reduction takes place is known as .....

Watch Video Solution

9. The frequency of alternating current is .....

Watch Video Solution

10. ..... electrodes are used during electrolysis of acidulated water.

Watch Video Solution

11. A graphite anode is preferred to other inert electrodes during electrolysis of fused lead bromide.

Watch Video Solution

12. During electrolysis of molten lead bromide a redox reaction is said to occur.

Watch Video Solution

13. Aluminium is extracted from its oxide by electrolytic reduction and not by conventional reducing agents.

Watch Video Solution

14. Why is lead bromide maintained in molten state ?

Watch Video Solution

15. Why is the electrolytic cell made of silica ?

Watch Video Solution

16. Name the ions present in the electrolyte.

Watch Video Solution

17. What would you observe at the (a) cathode (b) anode ?

Watch Video Solution

18. Summarize the electrode reactions.

Watch Video Solution

19. Complete the following table with respect to electrolysis of acidulated copper sulphate

solution using copper electrode :

$$CuSO_4 \rightleftharpoons \boxed{} + \boxed{}$$

$$H_2O \rightleftharpoons \boxed{} + \boxed{}$$

$$H_2SO_4 \rightleftharpoons \boxed{} + \boxed{}$$

At Cathode

$$\boxed{} + 2e^- \longrightarrow \boxed{}$$

At Anode

$$\boxed{} \longrightarrow \boxed{} + 2e^-$$

Watch Video Solution

Work Sheet 3 Fill In The Blanks

1. Article to be electroplated is always made as

...

Watch Video Solution

2. ..... current should be used for electrolysis.

Watch Video Solution

3. ..... is the electrolyte used for electroplating an iron spoon with silver.

Watch Video Solution

4. Insoluble impurities such as silver, gold, mercury settle below as .....

Watch Video Solution

5. During electrorefining of copper, a pure copper is made the .....

Watch Video Solution

6. Aluminium is extracted by dissolving aluminium oxide in ..

Watch Video Solution

7. Electrolyte used for electroplating with nickel is .....

Watch Video Solution

8. Electrolyte not used for electroplating with silver is .....

Watch Video Solution

9. ..... current should be used for electroplating.

Watch Video Solution

10. Cleaning of metal surfaces before electroplating is known as .....

Watch Video Solution

Work Sheet 3 Give Reasons With Regard To Electroplating

1. Low current should be used for longer time.

Watch Video Solution

2. The metal anode has to be replaced periodically. Why?

Watch Video Solution

3. Articles to be electroplated must be very clean.

Watch Video Solution

4. Electrolyte must be in the form of its saturated aqueous solution.

Watch Video Solution

Work Sheet 3 Complete The Following Table With Respect To Extraction Of Aluminium

1. Complete the following table with respect to extraction of aluminium :

Electrolyte : .....

Cathode : .....

Anode : .....

$Al_2O_3 \rightleftharpoons$ ..... + ...

Cation ↓ Cathode

Anion ↓ Anode

At cathode : ..... + $6e^-$ ⟶ .....

At anode : ..... − $6e^-$ ⟶ .....

..... + ... ⟶ ..... ↑

Watch Video Solution

Work Sheet 3 Answer The Following Questions

1. Give two reasons for electroplating an article.

Watch Video Solution

2. Why is copper purified?

Watch Video Solution

3. Why don't we take silver nitrate as an electrolyte while electroplating with silver ?

Watch Video Solution

4. Differentiate electrorefining and electroplating.

Watch Video Solution

Work Sheet 4 Complete The Following

1. Electrolysis of Silver nitrate using silver electrodes. Complete the table

Dissociation of $AgNO_3$	:	..... $\rightleftharpoons$ ..... + ...
Dissociation of water	:	..... $\rightleftharpoons$ ..... + ...
Reaction at cathode	:	..... + ... $\longrightarrow$ .....
Reaction at anode	:	..... − ..... $\longrightarrow$ .....

Watch Video Solution

2. Complete the reactions for electrolysis of concentrated sodium chloride using steel cathode and graphite anode

Dissociation of NaCl	:	..... $\rightleftharpoons$ ..... + ...
Dissociation of water	:	..... $\rightleftharpoons$ ..... + ...
Reaction at cathode	:	..... + ... $\longrightarrow$ .....
Reaction at anode	:	..... − ..... $\longrightarrow$ .....
		..... + ... $\longrightarrow$ .....

Watch Video Solution

3. Molten nickel sulphate using nickel electrode dissociation of $NiSO_4$

Dissociation of $NiSO_4$	:	..... $\rightleftharpoons$ ..... + ...
Reaction at cathode	:	..... + ... $\longrightarrow$ .....
Reaction at anode	:	..... − ..... $\longrightarrow$ .....

Watch Video Solution

4. Dilute sodium chloride using gaphite electrodes.

Dissociation of NaCl	:	..... $\rightleftharpoons$ ..... + ...
Dissociation of water	:	..... $\rightleftharpoons$ ..... + ...
Reaction at cathode	:	..... + ... $\longrightarrow$ .....
		..... + ... $\longrightarrow$ .....
Reaction at anode	:	..... − ..... $\longrightarrow$ .....
		..... $\longrightarrow$ ..... + ...

Watch Video Solution

5. Aqueous sodium hydroxide using graphite electrode

Dissociation of NaOH	:	..... $\rightleftharpoons$ ..... + ...
Dissociation of water	:	..... $\rightleftharpoons$ ..... + ...
Reaction at cathode	:	..... + ... $\longrightarrow$ + ...
		..... + ... $\longrightarrow$ .....
Reaction at anode	:	..... $\longrightarrow$ ..... + ...
		..... $\longrightarrow$ ..... + ...

Watch Video Solution

Additional Questions For Practice

1. What is the difference between :

Conductivity of copper metal and of $CuSO_4$ solution ?

Watch Video Solution

2. What is the difference between :

Modern explanation and Arrhenius explanation for the theory of electrolysis ?

Watch Video Solution

3. What is the difference between :

Electrolytic dissociation and ionisation ?

Watch Video Solution

4. What is the difference between :

A cation and an anion ?

Watch Video Solution

5. Name:

a salt which is a weak electrolyte.

Watch Video Solution

6. Name:

a base which is not an alkali.

Watch Video Solution

7. Name:

an inert electrode and an active electrode.

Watch Video Solution

8. Name:

a positively charged non-metallic ion.

Watch Video Solution

9. Name:

the factors that influence the selective discharge of ions.

Watch Video Solution

10. Name:

a non-metallic element which is a conductor of electricity.

Watch Video Solution

11. Which between Zn and Cu would occur more readily in nature as metal and which as ion ?

Watch Video Solution

12. Why cannot we store $AgNO_3$ solution in copper vessel ?

Watch Video Solution

13. Out of Cu and Ag, which is more reactive ?

Watch Video Solution

14. Explain the following:

A solution of cane sugar does not conduct electricity, but a solution of sodium chloride is a good conductor.

Watch Video Solution

15. Explain the following:

Copper is a good conductor of electricity, but it is a non-electrolyte.

Watch Video Solution

16. Explain the following:

During the electrolysis of an aqueous solution of NaCl, hydrogen ion is reduced at the cathode and not the sodium ion though both

Na^+ and H^+ ions are present in the solution.

Watch Video Solution

17. A solution of caustic soda (NaOH) in water or when fused, conducts an electric current. What is the similarity in these two cases ?

Watch Video Solution

18. State the electrode reaction at the anode during electrolysis of:

aqueous copper sulphate using platinum electrodes

Watch Video Solution

19. State the electrode reaction at the anode during electrolysis of:

acidified water.

Watch Video Solution

20. State the electrode reaction at the anode during electrolysis of:

aqueous nickel sulphate solution using nickel anode.

Watch Video Solution

21. State the electrode reaction at the anode during electrolysis of:

fused lead bromide.

Watch Video Solution

22. During electrolysis of an aqueous solution of sulphuric acid between platinum electrodes, two types of anions migrate towards anode but only one of them is discharged.

Name the product at the cathode and write the reaction.

Watch Video Solution

23. During electrolysis of an aqueous solution of sulphuric acid between platinum electrodes, two types of anions migrate towards anode but only one of them is discharged.

Do you notice any change in colour ? State why?

Watch Video Solution

24. During electrolysis of an aqueous solution of sulphuric acid between platinum electrodes,

two types of anions migrate towards anode but only one of them is discharged.

Name the main product of the discharge of anion at the anode and write the anode reaction.

Watch Video Solution

25. Explain why :

sodium chloride does not conduct electricity in the solid state but conduct in the fused state or in aqueous solution

Watch Video Solution

26. Explain why :

hydrochloric acid is a good conductor of electricity.

Watch Video Solution

27. An electrolytic cell is set-up using two platinum electrodes and an aqueous solution of copper (II) sulphate.

Draw the labelled diagram of the electrolytic cell.

Watch Video Solution

28. An electrolytic cell is set-up using two platinum electrodes and an aqueous solution of copper (II) sulphate.

Name the ions present in the cell.

Watch Video Solution

29. An electrolytic cell is set-up using two platinum electrodes and an aqueous solution of copper (II) sulphate.

Name the ions migrating towards cathode.

Watch Video Solution

30. An electrolytic cell is set-up using two platinum electrodes and an aqueous solution of copper (II) sulphate.

Name the ions migrating towards cathode.

Watch Video Solution

31. An electrolytic cell is set-up using two platinum electrodes and an aqueous solution of copper (II) sulphate.

Write the reaction at cathode.

Watch Video Solution

32. An electrolytic cell is set-up using two platinum electrodes and an aqueous solution

of copper (II) sulphate.

Write the reaction at anode.

Watch Video Solution

33. An electrolytic cell is set-up using two platinum electrodes and an aqueous solution of copper (II) sulphate.

Name the spectator ion in the solution.

Watch Video Solution

34. Give reason :

Carbon tetrachloride is a liquid but does not conduct electricity.

Watch Video Solution

35. Give reason :

For electroplating with silver, silver nitrate is not used as electrolyte.

Watch Video Solution

36. Give reason :

A graphite anode is preferred to other inert electrodes during electrolysis of fused lead bromide.

Watch Video Solution

37. Give reason :

Ammonia is unionised in the gaseous state but in the aqueous solution is a weak electrolyte

Watch Video Solution

38. Give reason :

In the electrolysis of acidified water dilute sulphuric acid is preferred to dilute nitric acid for acidification.

Watch Video Solution

39. Give reason :

Electrolysis of molten lead bromide is considered to be a reaction in which oxidation

and reduction go side by side i.e., a redox reaction.

Watch Video Solution

40. Give reason :

The blue colour of aqueous copper sulphate fades when it is electrolysed using platinum electrodes.

Watch Video Solution

41. Give reason :

Lead bromide undergoes electrolytic dissociation in the molten state but is a non-electrolyte in the solid state.

Watch Video Solution

42. Give reason :

The ratio of hydrogen and oxygen formed at the cathode and anode are 2 : 1 by volume.

Watch Video Solution

43. How electrolysis can be used in extraction of aluminium? Why aluminium cannot be reduced by conventional reducing agents ?

Watch Video Solution

44. With respect to electrical properties, give two differences between an electrolyte and a metal.

Watch Video Solution

45. State three differences between an atom and an ion.

Watch Video Solution

46. Give one example in substance which contains :

ions only,

Watch Video Solution

47. Give one example in substance which contains :

molecules only,

Watch Video Solution

48. Give one example in substance which contains :

both ions and molecules.

Watch Video Solution

49. Differentiate ionisation and dissociation

Watch Video Solution

Questions From Previous Icse Board Papers

1. Identify the following terms by matching them with appropriate description, write down the letter of the correct answer using each letter only once. A. Anode B. Cation C. lon D. Anion E. Cathode.

Positive or negative particle

Watch Video Solution

2. Identify the following terms by matching them with appropriate description, write down the letter of the correct answer using each letter only once. A. Anode B. Cation C. lon D. Anion E. Cathode.

Positive particle

Watch Video Solution

3. Identify the following terms by matching them with appropriate description, write down the letter of the correct answer using each letter only once. A. Anode B. Cation C. lon D. Anion E. Cathode.

Negative particle

Watch Video Solution

4. Identify the following terms by matching them with appropriate description, write down

the letter of the correct answer using each letter only once. A. Anode B. Cation C. lon D. Anion E. Cathode.

Positive particle

Watch Video Solution

5. Identify the following terms by matching them with appropriate description, write down the letter of the correct answer using each letter only once. A. Anode B. Cation C. lon D.

Anion E. Cathode.

Negative electrode.

Watch Video Solution

6. A metal article is to be electroplated with silver. Answer the questions :

Which ions must be present in electrolyte ?

Watch Video Solution

7. A metal article is to be electroplated with silver. Answer the questions :

What will be the nature of the (1) anode (2) cathode?

Watch Video Solution

8. A metal article is to be electroplated with silver. Answer the questions :

Name the gas evolved at anode when following are electrolysed : 1. Molten lead

bromide. 2. Concentrated hydrochloric acid. 3. Acidulated water.

Watch Video Solution

9. Explain why copper, though good conductor of electricity, is a non-electrolyte ?

Watch Video Solution

10. Name the gas released at cathode when acidulated water is electrolysed.

Watch Video Solution

11. Explain why solid sodium chloride does not allow the electricity to pass through.

Watch Video Solution

12. Fill in the blanks :

As we descend the electrochemical series, containing cations, the tendency of cations to

get ..... (oxidised/reduced) at cathode increases.

Watch Video Solution

13. Fill in the blanks :

The (higher/lower)..... the concentration of an ion in a solution, the greater is the probability of its being discharged at its appropriate electrode.

Watch Video Solution

14. Study the diagram given below and answer the question that follow

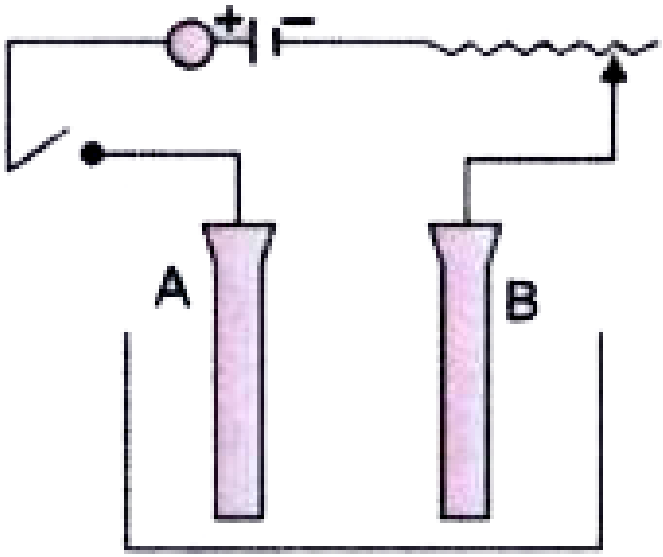

Give the names of the electrodes A and B.

Watch Video Solution

15. Study the diagram given below and answer the question that follow

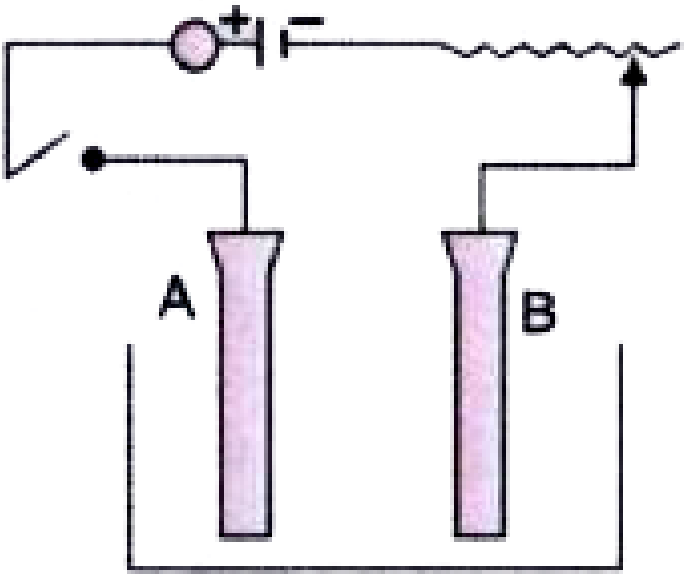

Which electrons is the oxidising electrode ?

Watch Video Solution

16. A strip of copper is placed in four different colourless salt solutions. They are $KNO_3, AgNO_3, Zn(NO_3)_2, Ca(NO_3)_2$. Which are of the solutions will finally turn blue?

Watch Video Solution

17. Write the equation of the reactions which take place at the cathode and anode when acidified water is electrolysed.

Watch Video Solution

18. Molten ionic compound

A. non-electrolyte

B. strong electrolyte

C. weak electrolyte

D. metallic conductor

Answer:

Watch Video Solution

19. Carbon tetrachloride

A. non-electrolyte

B. strong electrolyte

C. weak electrolyte

D. metallic conductor

Answer:

Watch Video Solution

20. An aluminium wire

A. non-electrolyte

B. strong electrolyte

C. weak electrolyte

D. metallic conductor

Answer:

Watch Video Solution

21. A solution containing solvent molecules, solute molecules and ions formed by the dissociation of solute molecules.

A. non-electrolyte

B. strong electrolyte

C. weak electrolyte

D. metallic conductor

Answer:

Watch Video Solution

22. A sugar solution with sugar molecules and water molecules

A. non-electrolyte

B. strong electrolyte

C. weak electrolyte

D. metallic conductor

Answer:

Watch Video Solution

23. During the electrolysis of molten lead bromide, which of the following takes place :

Bromine is released at the cathode

Watch Video Solution

24. During the electrolysis of molten lead bromide, which of the following takes place :

Lead is deposited at the anode

Watch Video Solution

25. During the electrolysis of molten lead bromide, which of the following takes place :

Bromine ions gain electrons

Watch Video Solution

26. During the electrolysis of molten lead bromide, which of the following takes place :

Lead is deposited at the cathode.

Watch Video Solution

27. Here is an electrode reaction

$$Cu \rightarrow Cu^{2+} + 2e^{-}$$

At which electrode (anode or cathode) would such a reaction take place ? Is this an example of oxidation or reduction.

Watch Video Solution

28. A solution contains magnesium ions (Mg^{2+}) ,iron (II) ions (Fe^{2+}) and copper ions (Cu^{2+}). On passing an electric current through this solution which ions will be the

first to be discharged at the cathode? Write the equation for the cathode reaction

Watch Video Solution

29. Why is carbon tetrachloride, which is a liquid and non-electrolyte ?

Watch Video Solution

30. A metal article is to be electroplated with silver. The electrolyte selected is sodium

argentocyanide.

What kind of salt is sodium argentocyanide?

Watch Video Solution

31. A metal article is to be electroplated with silver. The electrolyte selected is sodium argentocyanide.

Why is it preferred to silver nitrate as an electrolyte?

Watch Video Solution

32. A metal article is to be electroplated with silver. The electrolyte selected is sodium argentocyanide.

State one condition to ensure that the deposit is smooth, firm and long lasting.

Watch Video Solution

33. A metal article is to be electroplated with silver. The electrolyte selected is sodium argentocyanide.

Write the reaction taking place at the cathode.

Watch Video Solution

34. A metal article is to be electroplated with silver. The electrolyte selected is sodium argentocyanide.

Write the reaction taking place at the anode.

Watch Video Solution

35. Aqueous solution of Nickel sulphate contains Ni^{2+} and SO_4^{2-} ions.

Which ion moves towards the cathode?

Watch Video Solution

36. Aqueous solution of Nickel sulphate contains Ni^{2+} and SO_4^{2-} ions.

What is the product at the anode ?

Watch Video Solution

37. Mr. Ramu wants to electroplate his key chain with nickel to prevent rusting. For this

electroplating:

Name the electrolyte

Watch Video Solution

38. Mr. Ramu wants to electroplate his key chain with nickel to prevent rusting. For this electroplating:

Name the cathode

Watch Video Solution

39. Mr. Ramu wants to electroplate his key chain with nickel to prevent rusting. For this electroplating:

Name the anode

Watch Video Solution

40. Mr. Ramu wants to electroplate his key chain with nickel to prevent rusting. For this electroplating:

Give the reaction at the cathode

Watch Video Solution

41. Mr. Ramu wants to electroplate his key chain with nickel to prevent rusting. For this electroplating:

Give the reaction at the anode.

Watch Video Solution

42. Three different electrolytic cells A, B and C are connected in separate circuits. Electrolytic cell A contains sodium chloride solution. When

the circuit is completed, a bulb in the circuit glows brightly. Electrolytic cell B contains acetic acid solution and in this case the bulb in the circuit glows dimly. The electrolytic cell C contains sugar solution and the bulb does not glow. Give a reason for each of these observations.

Watch Video Solution

43. A compound which liberates reddish brown gas around the anode during electrolysis in its

molten state is :

Sodium chloride

Copper (II) oxide

Copper (II) sulphate

Lead (II) bromide

A. Sodium chloride

B. Copper (II) oxide

C. Copper (II) sulphate

D. Lead (II) bromide

Answer:

Watch Video Solution

44. Give reasons as to why:

the electrolysis of acidulated water is considered to be an example of catalysis.

Watch Video Solution

45. Differentiate between electrical conductivity of copper sulphate solution and copper metal.

Watch Video Solution

46. During the electrolysis of copper (II) sulphate solution using platinum as cathode and carbon as anode :

What do you observe at the cathode and at the anode?

Watch Video Solution

47. During the electrolysis of copper (II) sulphate solution using platinum as cathode

and carbon as anode :

What change is noticed in the electrolyte?

Watch Video Solution

48. During the electrolysis of copper (II) sulphate solution using platinum as cathode and carbon as anode :

Write the reactions at the cathode and at the anode.

Watch Video Solution

49. Some word/words are missing in the following statement. You are required to rewrite the statement in the correct form using the appropriate word/words:

Cations migrate during electrolysis.

Watch Video Solution

50. Identify the weak electrolyte from the following: (A) Sodium Chloride solution (B) Dilute Hydrochloric acid (C) Dilute Sulphuric acid (D) Aqueous Acetic acid.

Watch Video Solution

51. Give reasons for the following: An aqueous solution of sodium chloride conducts electricity.

Watch Video Solution

52. Select the correct answer from the list given in brackets :

An aqueous electrolyte consists of the ions

mentioned in the list, the ion which could be discharged most readily during electrolysis. $[Fe^{2+}, Cu^{2+}, Pb^{2+}, H^{+}]$

Watch Video Solution

53. Select the correct answer from the list given in brackets :

The metallic electrode which does not take part in an electrolytic reaction. (Cu, Ag, Pt, Ni).

Watch Video Solution

54. Select the correct answer from the list given in brackets :

The ion which is discharged at the anode during the electrolysis of copper sulphate solutions using copper electrodes as anode and cathode.$[Cu^{2+}, OH^{-} SO_4^{2-}, H^{+}]$

Watch Video Solution

55. Select the correct answer from the list given in brackets :

When dilute sodium chloride is electrolysed

using graphite electrodes, the cation is discharged at the cathode most readily. $[Na^+, OH^-, H^+, Cl^-]$.

Watch Video Solution

56. Select the correct answer from the list given in brackets :

During silver plating of an article using potassium argentocyanide as an electrolyte, the anode material should be (Cu, Ag, Pt, Fe).

Watch Video Solution

57. State one appropriate observation for each of the following: Electricity is passed through molten lead bromide.

Watch Video Solution

58. Which of these will act as a non-electrolyte?

A. Liquid carbon tetrachloride

B. Acetic acid

C. Sodium hydroxide aqueous solution acid

D. Potassium chloride aqueous solution

Answer:

Watch Video Solution

59. Copper sulphate solution is electrolysed using copper electrodes. Study the diagram given below and answer the question that follows: Which electrode to your left or right is

known as the oxidising electrode and why?

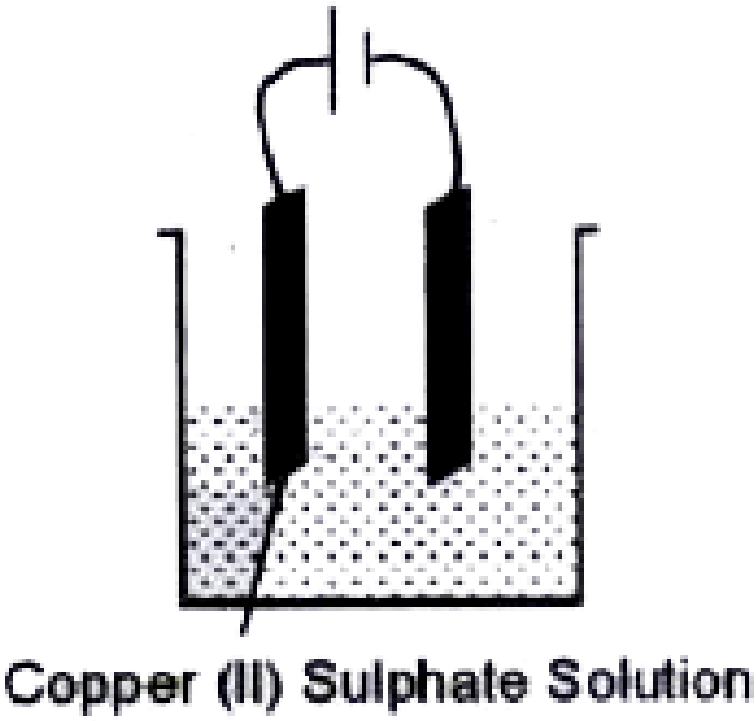

Watch Video Solution

60. Copper sulphate solution is electrolysed using copper electrodes. Study the diagram

given below and answer the question that follows:

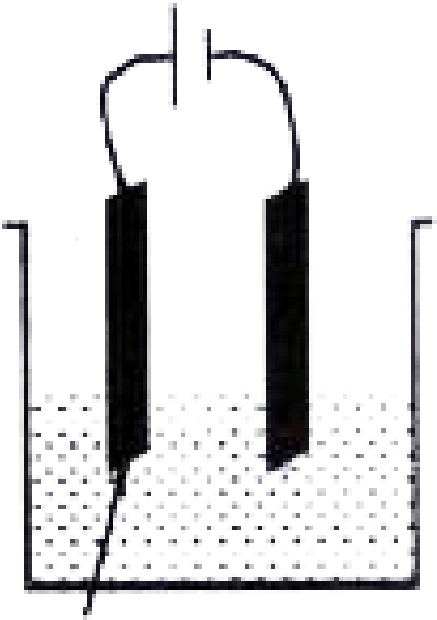

Copper (II) Sulphate Solution

Write the equation representing the reaction that occurs.

Watch Video Solution

61. Copper sulphate solution is electrolysed using copper electrodes. Study the diagram given below and answer the question that follows:

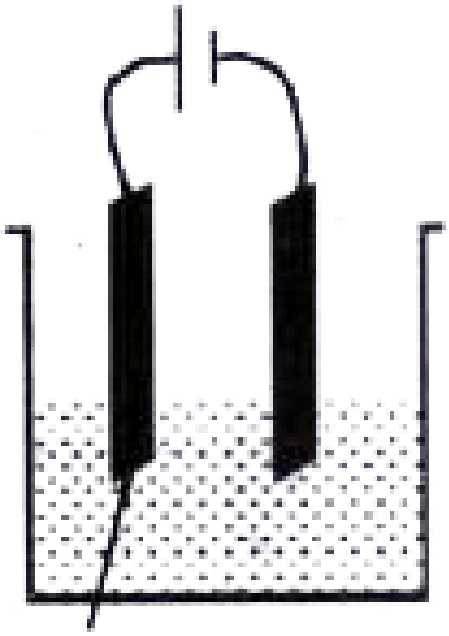

Copper (II) Sulphate Solution

State two appropriate observations for the above electrolysis reaction.

Watch Video Solution

62. When fused lead bromide is electrolysed we observe: [A]a silver grey deposit at anode and a reddish brown deposit at cathode; [B] a silver grey deposit at cathode and a reddish brown deposit at anode; [C] a silver grey deposit at cathode and reddish brown fumes at anode ; [D] silver grey fumes at anode and reddish brown fumes at cathode

A. a silver grey deposit at anode and a reddish brown deposit at cathode

B. a silver grey deposit at cathode and a reddish brown deposit at anode

C. a silver grey deposit at cathode and reddish brown fumes at anode

D. silver grey fumes at anode and reddish brown fumes at cathode

Answer:

Watch Video Solution

63. The electrolyte used for electroplating an article with silver is :

A. silver nitrate solution

B. silver cyanide solution

C. sodium argentocyanide solution

D. nickel sulphate solution

Answer:

Watch Video Solution

64. Give one word or phrase for the following:

Formation of ions from molecules.

Watch Video Solution

65. Give one word or phrase for the following:

Electrolytic deposition of a superior metal on a baser metal.

Watch Video Solution

66. State your observation in each of the following cases: At the cathode when acidified aqueous copper sulphate solution is electrolyzed with copper electrodes.

Watch Video Solution

67. Which electrode : anode or cathode is the oxidising electrode ? Why?

Watch Video Solution

68. State one relevant observation for each of the following: At the Anode when aqueous copper sulphate solution is electrolysed using copper electrodes.

Watch Video Solution

69. Give appropriate scientific reasons for the following statements :

During electrolysis of molten lead bromide, graphite anode is preferred to other electrodes

Watch Video Solution

70. Give appropriate scientific reasons for the following statements :

Electrolysis of molten lead bromide is considered to be a redox reaction.

Watch Video Solution

71. Differentiate between the terms strong electrolyte and weak electrolyte. (stating any

two differences)

Watch Video Solution

72. Complete the following table :

	Anode	Electrolyte
Purification of copper		

Watch Video Solution

73. Write the equation of the reactions which take place at the cathode and anode when

acidified water is electrolysed.

Watch Video Solution

74. The particles present in strong electrolytes are :

(a) only molecules

(b) mainly ions

(c) ions and molecules

(d) only atoms

A. only molecules

B. mainly ions

C. ions and molecules

D. only atoms

Answer:

Watch Video Solution

75. Write equations for the reactions taking place at the two electrodes (mentioning clearly the name of the electrode) during the electrolysis of:

Acidified copper sulphate solution with copper electrodes.

Watch Video Solution

76. Write equations for the reactions taking place at the two electrodes (mentioning clearly the name of the electrode) during the electrolysis of:

Molten lead bromide with inert electrodes.

Watch Video Solution

77. Name the product formed at the anode during the electrolysis of acidified water using platinum electrodes.

Watch Video Solution

78. Name the metallic ions that should be present in the electrolyte when an article made of copper is to be electroplated with silver.

Watch Video Solution

79. Give reasons why :

Sodium chloride will conduct electricity only in fused or aqueous solution state.

Watch Video Solution

80. Give reasons why :

In the electroplating of an article with silver, the electrolyte sodium argentocyanide solution is preferred over silver nitrate solution.

Watch Video Solution

81. Give reasons why :

Although copper is a good conductor of electricity, it is a non-electrolyte.

Watch Video Solution

82. Identify the substance underlined, in the following case : The electrolyte used for electroplating an article with silver

Watch Video Solution

83. State the observations at the anode and at the cathode during the electrolysis of : fused lead bromide using graphite electrodes.

Watch Video Solution

84. State the observations at the anode and at the cathode during the electrolysis of : copper sulphate solution using copper electrodes.

Watch Video Solution

85. Select the ion , that would get selectively discharged from the aqueous mixture of the ions listed below:

SO_4^{2-} , NO_3^- and OH^-

Watch Video Solution

86. Select the ion in each case, that would get selectively discharged from the aqueous

mixture of the ions listed below:

Pb^{2+}, Ag^{+} and cu^{2+}

Watch Video Solution

87. Answer the following questions with respect to the electrolytic process in the extraction of aluminum :

Identify the components of the electrolyte other than pure alumina and the role played by each.

Watch Video Solution

88. Answer the following questions with respect to the electrolytic process in the extraction of aluminum :

Explain why powdered coke is sprinkled over the electrolytic mixture.

Watch Video Solution

89. The electrolysis of acidified water is an example of:

A. Reduction

B. Oxidation

C. Redox reaction

D. Synthesis

Answer:

Watch Video Solution

90. Give one word or a phrase for the following statement : Process of formation of

ions from molecules which are not in ionic state.

Watch Video Solution

91. State one relevant observation for the following: At the anode, when molten lead bromide is electrolyzed using graphite electrodes.

Watch Video Solution

92. Name the gas that is produced in the following case : At the anode during the electrolysis of acidified water.

Watch Video Solution

93. Fill up the blank with the correct choice given in bracket. Electrolysis of aqueous sodium chloride solution will form _____ at the cathode. (hydrogen gas/sodium metal)

Watch Video Solution

94. Complete the following table which refers to the conversion of ions to neutral particles.

Conversion	Ionic Equation	Oxidation/ Reduction
Chloride ion to chlorine molecule	(i) _____	(ii) _____
Lead (II) ion to lead	(iii) _____	(iv) _____

Watch Video Solution

95. For the electro-refining of copper

What is the cathode made-up of ?

Watch Video Solution

96. For the electro-refining of copper

Write the reaction that takes place at the anode.

Watch Video Solution

Additional Questions

1. Define i] electrolysis ii] electrodes iii] iosn iv] electrolytic dissociateion

Watch Video Solution

2. Differentiate between i] electrolytes and non-electrolytes ii] strong and weak electrolytes iii] anode and cathode iv] electrolytic dissociation and ionisation with suitable examples.

Watch Video Solution

3. Compare the flow of electricity through a nickel wire and nickel sulphate solution.

Watch Video Solution

4. Name three organic compounds and one neutral liquid which are non-electrolytes.

Watch Video Solution

5. State which of the following solutions are weak electrolytes - $dil. HCI$, $carbonicacid$, NH_4OH, dil.H_(2) SO_(4) , $AGNO_3$, Na_2CO_3, $PbBr_2$, KOH, HI,

oxalic acid, $NAHCO_3$, sodium acetate , Na_2SO_4, $NaOH$

Watch Video Solution

6. State which of the following solution contain both molecules and ions - CH3COOH, NaOH, NH4OH

Watch Video Solution

7. State given reasons, in what state or medium does

i] NACl

ii] HCl gas

iii] NH_3 gas conduct electricity .

Watch Video Solution

8. State on what basis are acids, bases and salts classified as strong or weak electrolytes .

Watch Video Solution

9. Explain the term

i] metal activity or electrochemical series

ii] selective discharge of ions

Watch Video Solution

10. From the ions

i] SO_4^{2-} and OH^{1-}

ii] Cu^2 and H^{1+}

iii] Ag^{1+} and H^{1+} state giving reasons

which ion is discharged at the respective electrode in each case

Watch Video Solution

11. With reference to nature of electrodes- name three inert and three active electrodes.

Watch Video Solution

12. State the reason for difference in product formed at the anode during electrolysis of aq.

$CuSO_4$ soln. using

i] active electrodes

ii] inert electrode-platinum anode.

Watch Video Solution

13. Give the electrode reaction for formation of

i] Lead metal and bromine vapours from molten $PbBr_2$ using inert electrodes

Watch Video Solution

14. Write the reactions at the cathode and at the anode during electrolysis of copper sulphate using copper electrode.

Watch Video Solution

15. Give reasons for the following change

i] pure water a non-electrolyte - becomes an electrolyte on addition of dil H_2SO_4

ii] Blue colour ofaq $CuSO_4$ - turns almost

colourless on its electrolysis using Pt electrodes.

Watch Video Solution

16. 'Iron is electroplated with silver' - state two reason for electroplating

Watch Video Solution

17. Draw a diagram for

i] electroplating an article with silver

ii] electrorefining or purification of copper.

Watch Video Solution

18. State the i] electrolyte ii] cathode used iii] anode used iv] electrode reaction at cathode v] electrode reaction at anode iv] product at cathode and anode - during a] electroplating an article with nickel b] electroplating a spoon with silver c] purification of impure copper.

Watch Video Solution

19. Give a reason why the metals - copper, silver and lead are electrorefined but K, Na and Ca are not .

Watch Video Solution

20. Explain the term ' electrometallurgy' . At which electrode is the extracted metal always deposited.

Watch Video Solution

21. State how activity series of metals playse a role in extraction of metals from their oxides.

Watch Video Solution

22. State the electrode reaction at the respective electrodes during extraction of Al from Al_2O_3

Watch Video Solution

Unit Test Paper 5 Electrolysis

1. Match the statements 1 to 5 with their answer selected form A to J

A: Catjpde, B: Sucrose soln, C: Cl^{1-} , D: Formic acid,

E : Electrometallurgy, F: Ammonia,, G: Mg^{2+} , H: Electrorefinin, I: Sulphur dioxide , J: Anode

1. A compound containing molecules only.

2. A compound which ionizes in soln. state but not in gaseous stae.

3 The ion which accepts electrons form the cathode and gets reduced to neutral atoms.

4. The electrode to which the cyanide ion of

aq. $Na[AG(CN)_2]$ migrate during electrolysis.

5. An application of electrolysis in which the anode does not generally diminish in size

Watch Video Solution

2. Complete the tabel given below .

	Nature of Anode	Nature of Cathode	Ions present in electrolyte	Ion/s discharged at Cathode	Ion/s discharged at Anode
1. Electroplating an iron rod with silver					
2. Electroplating a copper sheet with nickel					
3. Electrorefining of silver					
4. Extraction of potassium from KCl					
5. Extraction of aluminium from Al_2O_3					

Watch Video Solution

3. Select the correct word from the words in bracket to complete the sentence :

The electrode at which anions donate excess electrons and are oxidized to neutral atoms is the _____[anode/cathode]

Watch Video Solution

4. Select the correct word from the words in bracket to complete the sentence :

On electrolysis , $Ag^{1+} \& H^{1+}$ ions migrate to

the _____[cathode / anode] & _____ $[Ag^{1+}/H^{1+}]$ are discharged.

Watch Video Solution

5. Select the correct word from the words in bracket to complete the sentence:

Electrolysis is a/an _____[oxidation / reduction /redox] reaction in which reduction reaction takes place at the _____[cathode/anode]

Watch Video Solution

6. Select the correct word from the words in bracket to complete the sentence :

According to Arrhenius's theory the amount of electricity conducted by the electrolyte depends on the _____[nature/concentration]of the ions is solution.

Watch Video Solution

7. Select the correct word from the words in bracket to complete the sentence :

Salts ionize in aq. soln. on passage electric current to give ___[negative/positive]ions other H^+ ions

Watch Video Solution

8. Give balanced equations for the electrode reactions involved in the following

conversions at the respective electrodes :

1.	Aluminium oxide	→	Oxygen gas	←	Copper [II] sulphate
2.	Copper metal	→	Copper ions	→	Copper metal
3.	Lead [II] chloride	→	Chlorine gas	←	Hydrochloric acid
4.	Hydroxyl ions	←	Acidified water	→	Oxygen gas
5.	Potassium bromide	→	Bromine gas	←	Lead bromide

Watch Video Solution

9. Select the correct answer from the list in bracket :

The cation discharged at the cathode most readily.

Watch Video Solution

10. Select the correct answer from the list in bracket :

The anion discharged at the anode with most difficulty.

Watch Video Solution

11. Select the correct answer from the list given in brackets :

The metallic electrode which does not take part in an electrolytic reaction. (Cu, Ag, Pt, Ni).

Watch Video Solution

12. What will happen during the electrolysis of aqueous solution of $CuSO_4$ by using platinum electrodes?

Watch Video Solution

13. Select the correct answer from the list given in brackets :

The metallic electrode which does not take part in an electrolytic reaction. (Cu, Ag, Pt, Ni).

Watch Video Solution

14. Electrolysis of molten lead bromide is considered as redox reaction . Give reason .

Watch Video Solution

15. Give reasons for the following

Lead bromide undergoes electrolytic dissociation in the molten state but is a non-electrolyte in the solid state.

Watch Video Solution

16. Give reason :

The blue colour of aqueous copper sulphate fades when it is electrolysed using platinum electrodes.

Watch Video Solution

17. Select the correct answer from the list given in brackets :

When dilute sodium chloride is electrolysed

using graphite electrodes, the cation is discharged at the cathode most readily. $[Na^+, OH^-, H^+, Cl^-]$.

Watch Video Solution

18. Give reason :

In the electrolysis of acidified water dilute sulphuric acid is preferred to dilute nitric acid for acidification.

Watch Video Solution

Fill In The Blanks

1. Electrolysis is the passage of ..... through a liquid or a solution accompanied by a ..... change.

A. chemical, electricity

B. electricity, chemical

C. electrons, chemical

D. electricity, physical

Answer: B

Watch Video Solution

2. An electrically charged atom is called.....

A. a proton

B. an ion

C. an electron

D. a cyclotron

Answer: B

Watch Video Solution

3. The solution of a substance which conducts electricity is called .....

A. an electrolyte

B. a conductor

C. an insulator

D. None of these

Answer: A

Watch Video Solution

4. An electrolyte is a .....

A. metal

B. sugar

C. cell

D. liquid that conducts electricity

Answer: D

Watch Video Solution

5. A weak electrolyte is one which .....

A. dissociates completely

B. is feebly ionised in the solution

C. ionises completely

D. is having high electrical conductivity

Answer: B

Watch Video Solution

6. A strong electrolyte is one which .....

A. is completely ionised in the solution

B. dissociates partially in solution

C. is having low electrical conductivity

D. Ionises partially

Answer: A

Watch Video Solution

7. Sodium chloride is .....

A. strong electrolyte

B. weak electrolyte

C. non-electrolyte

D. None of these

Answer: A

Watch Video Solution

8. Water is .....

A. strong electrolyte

B. non-electrolyte

C. weak electrolyte

D. None of these

Answer: C

Watch Video Solution

9. ..... is a non-electrolyte.

A. Acetic acid

B. Sugar

C. Calcium

D. Potassium

Answer: B

Watch Video Solution

10. Pure water consists almost entirely of .....

A. ions

B. atoms

C. ions and molecules

D. molecules

Answer: D

Watch Video Solution

11. In the electrolysis of acidulated water, oxygen is produced by the discharge of.....ions at the anode.

A. OH^-

B. SO_4^{2-}

C. Both (a) and (b)

D. None of these

Answer: A

Watch Video Solution

12. Ionisation is a ..... process.

A. irreversible

B. reversible

C. Both (a) and (b)

D. None of these

Answer: C

Watch Video Solution

13. The gas given off at cathode during the electrolysis of acidulated water is .....

A. Nitrogen

B. Hydrogen

C. Oxygen

D. None of these

Answer: B

Watch Video Solution

14. With platinum electrodes, hydrogen is liberated at the ..... and oxygen at the ..... During the electrolysis acidified water.

A. cathode, anode

B. anode, cathode

C. anode, anode

D. cathode, cathode

Answer: A

Watch Video Solution

15. As we descend in the electrochemical series containing cations, the tendency of the cations to get .... at the cathode increases.

A. oxidised

B. reduced

C. increased

D. None of these

Answer: B

Watch Video Solution

16. The electrode where the current enters in to the electrolyte is called the.....

A. electric current

B. conductor

C. cathode

D. anode

Answer: D

Watch Video Solution

17. The negative electrode in electrolysis is called the.....

A. anode

B. cathode

C. gas electrode

D. None of these

Answer: B

Watch Video Solution

18. Cations migrate to.....during electrolysis.

A. electrode

B. anode

C. cathode

D. None of these

Answer: C

Watch Video Solution

19. During electrolysis, anions undergo..... At the .....

A. reduction, anode

B. oxidation, anode

C. oxidation, cathode

D. none of these

Answer: B

Watch Video Solution

20. The reactions occurring at the cathode during electrolysis involve.....

A. reduction

B. oxidation

C. reverse

D. None of these

Answer: A

Watch Video Solution

21. In a voltaic cells, the salt bridge .....

A. is not necessary in order for the cell to work

B. acts as a mechanism to allow mechanical mixing of the solutions

C. allows charge balance to be maintained in the cell

D. is tightly plugged with firm agar gel through which ions cannot pass

Answer: C

Watch Video Solution

22. In a solution or molten state, a ..... electrolyte consists almost entirely of ions.

A. non

B. strong

C. weak

D. None of these

Answer: B

Watch Video Solution

Multiple Choice Questions

1. Identify the weak electrolyte from the following :

A. Sodium chloride solution

B. Dilute hydrochloric acid

C. Dilute sulphuric acid

D. Aqueous acetic acid

Answer: D

Watch Video Solution

2. What is the product formed at the cathode in the electrolysis of aqueous $CuSO_4$?

A. Copper metal

B. Oxygen gas

C. Hydrogen gas

D. Sulphur

Answer: A

Watch Video Solution

3. Which of these will act as a non-electrolyte?

A. Liquid carbon tetrachloride

B. Acetic acid

C. Sodium hydroxide aqueous solution

D. Potassium chloride aqueous solution

Answer: A

Watch Video Solution

4. During ionisation metals lose electrons, this change can be called :

A. Oxidation

B. Reduction

C. Redox

D. Displacement

Answer: A

Watch Video Solution

5. The metallic electrode which does not take part in an electrolytic reaction ? (Inert electrode)

A. Cu

B. Ag

C. Pt

D. Ni

Answer: C

Watch Video Solution

6. When dilute sodium chloride is electrolysed using graphite electrodes, which cation is discharged at the cathode most readily?

A. Na^+

B. OH^-

C. H^+

D. Cl^-

Answer: C

Watch Video Solution

7. During electrolysis of NaCl, the gas discharged at the anode is :

A. Chlorine

B. Oxygen

C. Hydrogen

D. None of these

Answer: A

Watch Video Solution

8. A compound which liberates reddish brown gas around the anode during electrolysis in its molten state is :

A. sodium chloride

B. Copper (II) oxide

C. Copper (II) sulphate

D. Lead (II) bromide

Answer: D

Watch Video Solution

9. The charge required for the reduction of 1 mole of MnO_4^- to MnO_2 is :

A. 1F

B. 3F

C. 5F

D. 7F

Answer: B

Watch Video Solution

10. The vessel in which electrolysis of lead bromide is carried out is :

A. Clay crucible

B. Glass vessel

C. Silica crucible

D. Aluminium vessel

Answer: C

View Text Solution

11. The ion which is discharged at the cathode during the electrolysis of copper sulphate solutions using copper electrodes an anode and cathode ?

A. Cu^{2+}

B. OH^{-}

C. SO_4^{2-}

D. H^+

Answer: A

Watch Video Solution

12. An aqueous electrolyte consists of the ions mentioned in the list , the ion which could be discharged most readily during electrolysis ?

A. Fe^{2+}

B. Cu^{2+}

C. Pb^{2+}

D. H^{+}

Answer: B

Watch Video Solution

13. During the electrolysis of molten lead bromide which of the following takes place :

A. Bromide is released at the cathode

B. Lead is deposited at the anode

C. Bromide ions gain electrons

D. Lead is deposited at the cathode

Answer: D

Watch Video Solution

14. Choose the correct answer from the options given below

An electrolyte which completely dissociates into ions is :

A. Alcohol

B. Carbonic acid

C. Sucrose

D. Sodium hydroxide

Answer: D

Watch Video Solution

15. Select the correct answer from the list given in brackets :

During silver plating of an article using

potassium argentocyanide as an electrolyte, the anode material should be (Cu, Ag, Pt, Fe).

A. Cu

B. Ag

C. Pt

D. Fe

Answer: B

Watch Video Solution

16. The electrolysis of acidified water is an example of:

A. Reduction

B. Oxidation

C. Redox reaction

D. Synthesis

Answer: C

Watch Video Solution

17. Which of the following statements is not correct about an inert electrode in a cell?

A. It does not participate in the cell reaction

B. It provides surface either for oxidation or for reduction reaction

C. It provides surface for conduction of electrons

D. It provides surface for redox reaction

Answer: D

Watch Video Solution

18. Level of electrolyte in a cell should be _____ the level of plates

A. below

B. equal to

C. above

D. None of these

Answer: C

View Text Solution

19. Which of the following equations represents the reaction that takes place at the cathode during the electrolysis of aqueous silver nitrate with carbon electrodes ?

A. $Ag^{+}(\text{aq}) + e^{-} \rightarrow Ag(s)$

B. $2H^{-}(\text{aq}) + 2e^{-} \rightarrow H_2(l)$

C. $2N^{-}(\text{aq}) \rightarrow N_2(\text{aq}) + 6e^{-}$

D.

$$4OH^{-}(\text{aq}) \rightarrow O_2(\text{g}) + 2H_2O(\text{l}) + 4e^{-}$$

Answer: A

Watch Video Solution

20. In the standard notation for a voltaic cell, the double vertical line "[ ]" represents :

A. a phase boundary

B. gas electrode

C. a wire (metal) connection

D. a salt bridge

Answer: D

Watch Video Solution

21. Identify the weak electrolyte from the following :

A. Sodium chloride solution

B. Dilute hydrochloric acid

C. Dilute sulphuric acid

D. Aqueous acetic acid

Answer: D

View Text Solution

22. Which of the following is true in case of electrolytic refining ?

A. Impure metal is made cathode

B. Impure metal is made anode

C. Impure metal is made cathode and pure metal as anode

D. Both electrodes must be of pure metal

Answer: B

View Text Solution

23. Which of the following statements is FALSE ?

A. Oxidation and reduction half-reactions occur at electrodes in electrochemical cells.

B. All electrochemical reactions involve the transfer of electrons.

C. Reduction occurs at the cathode.

D. All voltaic (galvanic) cells involve the use of electricity to initiate nonspontaneous chemical reactions.

Answer: D

View Text Solution

24. Element X is extracted by the electrolysis of a molten compound of elements X and Y . The electrode reactions are as shown:

At the cathode : $X^{2+}(\mathrm{I}) + 2e^- \rightarrow X$

(I) At the anode : $2Y^{2-}(\mathrm{I}) \rightarrow Y_2(\mathrm{g}) + 4e^-$

A. Aluminium oxide

B. Calcium chloride

C. Magnesiuim oxide

D. Potassium chloride

Answer: C

Watch Video Solution

25. A solid deposit of element R is formed at the cathode when an aqueous solution containing ions of R is electrolysed. Which statement about element R is correct ?

A. Element R is below hydrogen in the reactivity series.

B. R gains electrons to form ions at the cathode.

C. Element R forms negatively charged ions.

D. Ions of R losses electrons at the cathode.

Answer: A

Watch Video Solution

26. Which statement best explains the generation of electrical energy in a simple cell ?

A. Free moving ions in the electrolyte

B. Free moving electrons in the electrolyte.

C. transfer of electrons from a more reactive metal to a less reactive metal .

D. Transfer of electrons from a less reactive metal to a more reactive metal.

Answer: C

Watch Video Solution

27. Conductivity of an electrolytic solution depends on :

A. nature of electrolyte

B. power of AC source

C. Distance between the electrodes.

D. None of these

Answer: A

Watch Video Solution

28. The cathode production of the electrolysis of zinc iodide is :

A. Iodine

B. Zinc

C. Zinc oxide

D. Chloride

Answer: B

Watch Video Solution

29. Electrolysis of pure ionic molten compounds metal is formed at :

A. anode

B. cathode

C. inert electrode

D. base of the apparatus

Answer: B

Watch Video Solution

30. The electrolyte used for electroplating an article with silver is :

A. Silver nitrate solution

B. Silver cyanide solution

C. Nickel sulphate solution

D. Sodium argentocyanide solution

Answer: D

Watch Video Solution

31. _____ the chemical change that occurs at this electrode is called _____.

A. anode, oxidation

B. anode, reduction

C. cathode, oxidation

D. cathode, reduction

Answer: A,D

Watch Video Solution

32. For the given cell, $Mg|Mg^{2+}||Cu^{2+} \mid Cu$

(a)Mg is cathode

(b)Cu is cathode

(c)The cell reaction is

$Mg + Cu^{2+} \rightarrow Mg^{2+} + Cu$

(d)`Cu is the oxidising agent

A. Mg is cathode

B. Cu is cathode

C. The cell reaction is

$$Mg + Cu^{2+} \rightarrow Mg^{2+} + Cu$$

D. Cu is the oxidising agent

Answer: B

Watch Video Solution

33. The half-reaction that occurs at the anode during the electrolysis of molten sodium bromide is :

A. $2Br \rightarrow Br_2 + 2e^-$

B. $Br_2 + 2e^- \rightarrow 2Br^-$

C. $Na^+ + e^- \rightarrow Na$

D. $Na \rightarrow Na^+ + e^-$

Answer: A

Watch Video Solution

34. Which compound releases bromide gas at anode ?

A. Lead(II) bromide

B. Copper (II) oxide

C. Sodium chloride

D. Copper(II) Sulphate

Answer: A

Watch Video Solution

35. Which of these will act as a non-electrolyte?

A. Liquid carbon tetrachloride

B. Acetic acid

C. Sodium hydroxide aqueous solution

D. Potassium chloride aqueous solution

Answer: A

Watch Video Solution

36. When fused lead bromide is electrolysed we observe: [A]a silver grey deposit at anode and a reddish brown deposit at cathode; [B] a silver grey deposit at cathode and a reddish brown deposit at anode; [C] a silver grey deposit at cathode and reddish brown fumes at anode ; [D] silver grey fumes at anode and reddish brown fumes at cathode

A. A silver-grey deposit at the anode and a reddish brown deposit at the cathode

B. A silver-grey deposit at the cathode and a reddish brown deposit at the anode

C. A silver-grey deposit at the cathode and reddish-brown fumes at the anode

D. Silver grey fumes at the anode and reddish -brown fumes at the cathode

Answer: C

Watch Video Solution

37. Water is decomposed into hydrogen and oxygen by means of an electric current by the method of:

A. electrolysis

B. electric heating

C. electroplating

D. None of these

Answer: A

Watch Video Solution

38. On heating one end of a piece of a metal , the other end becomes hot because of

A. the resistance of the metal

B. mobility of atoms in the metal

C. energised electrons moving to the other end

D. minor perturbation in the energy of atoms

Answer: C

Watch Video Solution

39. The current flow through electrolyte is due to the movement of:

A. Holes

B. Ions

C. Electrons

D. None of these

Answer: B

Watch Video Solution

40. The particles present in strong electrolytes are

A. Only molecules

B. Mainly ions

C. Ions and molecules

D. Only atoms

Answer: B

Watch Video Solution

Reason Based Questions

1. Metals like potassium, calcium, sodium, etc., can be extracted only by electrolysis. Why?

A. Conventional reducing agents

B. Does not supply sufficient energy

C. A large number of hydronium ions

D. Both (a) and (b)

Answer: D

Watch Video Solution

2. Dilute acids are strong electrolytes. Why?

A. Produce the large number of hydronium ions

B. Produce the smaller number of hydronium ions

C. Produce the large number of hydrogen ions

D. Produce the large number of copper ions

Answer: A

Watch Video Solution

3. Sea water is a strong electrolyte. Why?

A. Compounds dissociate into ions

B. Sodium chloride dissolved in it

C. Discharge electrons

D. None of the above

Answer: B

Watch Video Solution

4. Copper is a good conductor of electricity, but it is a non-electrolyte. Why?

A. Contains free electrons

B. Metal

C. Does not dissociate into ions

D. All of the above

Answer: D

Watch Video Solution

5. Mercury is a liquid and allows the flow of electricity, though it is not an electrolyte.

A. Breaks up into cations and anions

B. Due to the presence of free electrons in its penultimate shell

C. New substance is formed

D. All of the above

Answer: B

Watch Video Solution

6. A solution of cane sugar does not conduct electricity, but a solution of sodium chloride is a good conductor.

A. Sugar cane solution is a covalent compound

B. Sodium chloride solution contains free sodium and chloride ions

C. Sodium chloride solution migrate to positively charged electrodes

D. All of the above

Answer: B

Watch Video Solution

Figure Based Questions

1. Study the given figure and answer the question that follow :

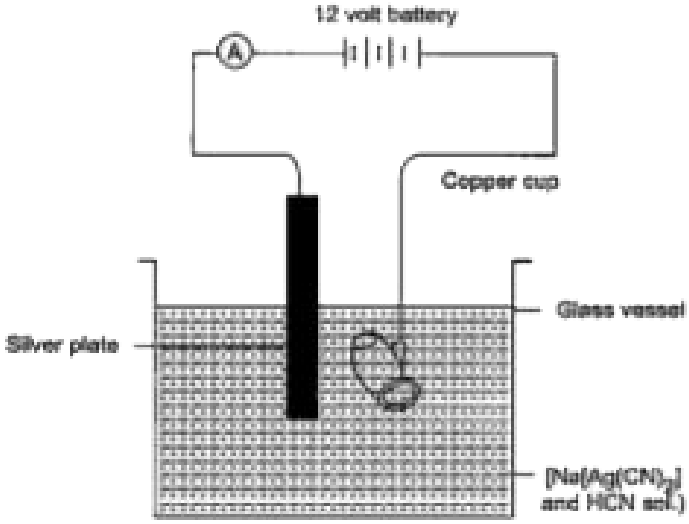

Fig. Silver electroplating

Name the cathode and anode used during electroplating of silver.

A. Hydrocyanic acid, Sodium argento cyanide

B. Copper cup, silver rod

C. Silver rod, copper cup

D. None of these

Answer: B

View Text Solution

2. Study the given figure and answer the question that follow:

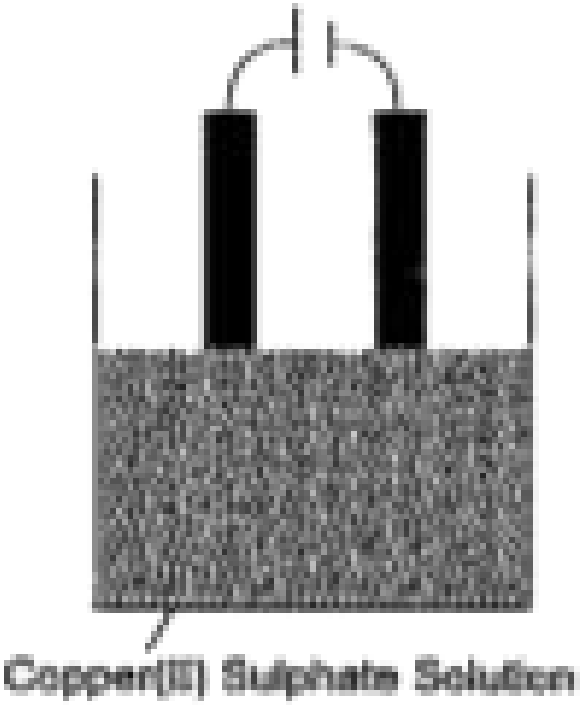

Write the equation representing the reaction that occurs.

A. At the Cathode: $Cu - 2e^- \rightarrow Cu^{2+}$

At the Anode $Cu^{2+} + 2e^- \rightarrow Cu$

B. At the Cathode : $Cu^+ + 2e^- \rightarrow Cu$

At the Anode : $Cu^{2+} - 2e^- \rightarrow Cu^{2+}$

C. Both (a) and (b)

D. At the Cathode : $Cu^{2+} + 2e^- \rightarrow Cu$

At the Anode : $Cu - 2e^- \rightarrow Cu^{2+}$

Answer: D

Watch Video Solution

3. Study the given figure and answer the question that follow:

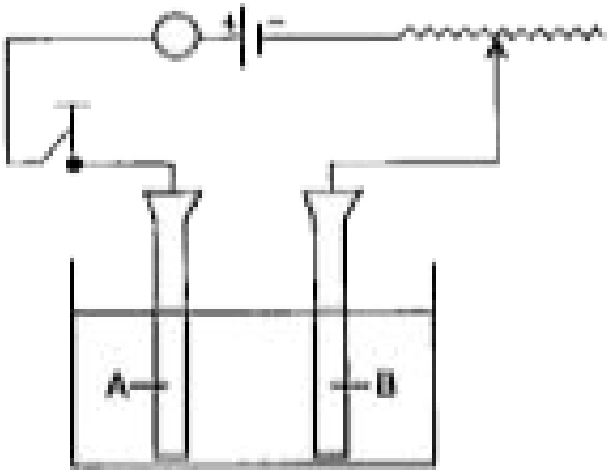

Give the names of the electrodes A and B.

A. A-Cathode B- Anode

B. A-Anode B-Cathode

C. A-Anode B- Anode

D. A-Cathode B-Cathode

Answer: B

Watch Video Solution

4. Study the given figure and answer the question that follow:

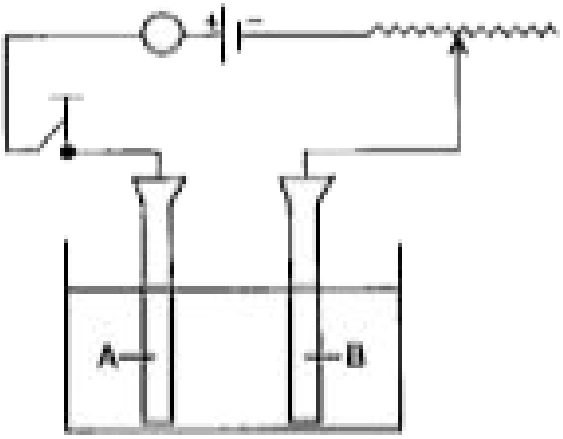

Which electrode is the oxidising electrode?

A. A

B. B

C. Both (a) and (b)

D. None of these

Answer: A

Watch Video Solution

5. Study the given figure and answer the question that follow:

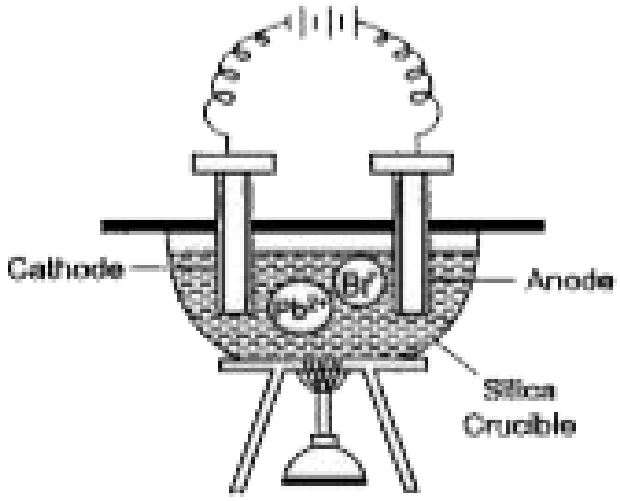

Why silica crucible is used in this type of electrolysis?

A. Non-reactive

B. Non-conductor of electricity

C. Withstand at high temperature

D. All of the above

Answer: D

Watch Video Solution

6. Study the given figure and answer the question that follow:

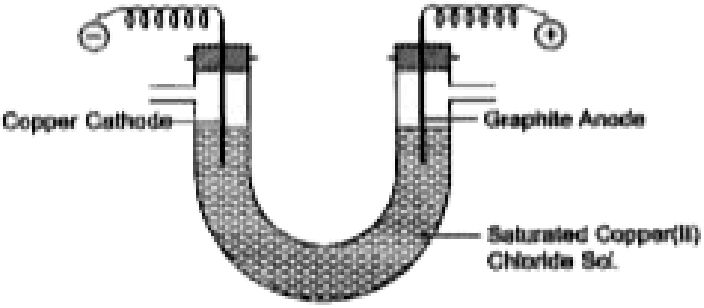

Name the ions which will migrate to cathode.

A. Hydrogen ions (H^+)

B. Copper ions (Cu^{2+})

C. Chloride ions (CI^-)

D. Both (a) and (b)

Answer: D

Watch Video Solution

7. Study the given figure and answer the question that follow:

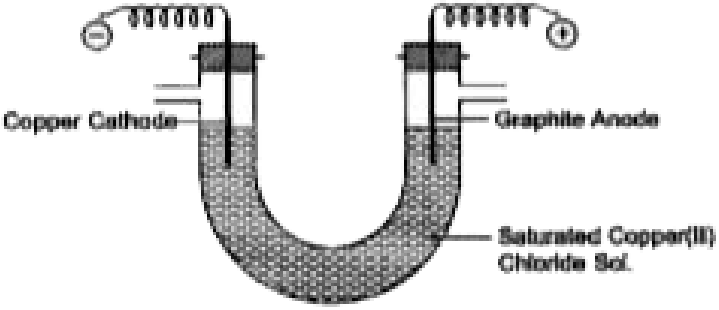

Name the ions which will migrate to anode.

A. Hydroxyl ions (OH^-)

B. Chloride ions (CI^-)

C. Both (a) and (b)

D. Hydrogen ions H^+

Answer: C

Watch Video Solution

8. An aqueous solution of nickel (II) sulphate was electrolysed using nickel electrodes. Observe the diagram and answer the questions that follow :

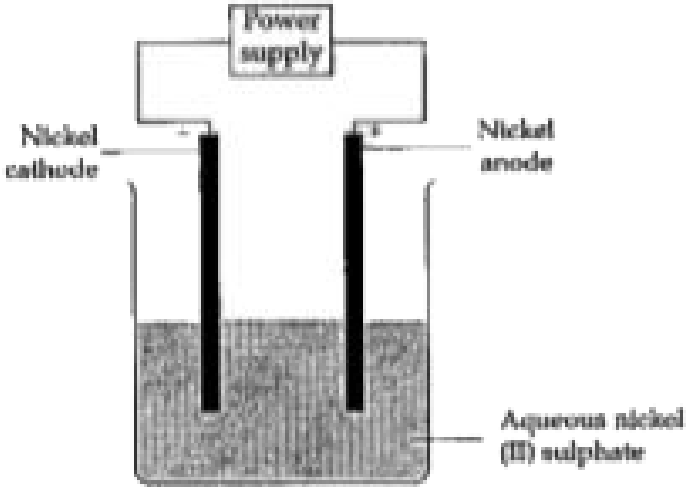

Which equation for the reaction at the anode is correct?

A. $Ni \rightarrow Ni^{2+} + 2e^-$

B. $Ni + 2e^- \rightarrow Ni^{2+}$

C. $Ni^{2+} \rightarrow Ni + 2e^-$

D. $Ni^{2+} + 2e^- \rightarrow Ni$

Answer: C

Watch Video Solution

Assertion And Reason Based Questions

1. Assertion: In cell Current stops flowing when E_{cell} = 0.

Reason: Equilibrium of the cell reaction is attained

A. Assertion and Reason both are correct statements and reason is the correct explanation of the assertion.

B. Assertion and Reason both are correct statements, but reason is not the correct explanation of the assertion.

C. Assertion is true, but reason is false.

D. Assertion is false, but reason is true.

Answer: A

Watch Video Solution

2. Assertion: During electrolysis of $CuSO_4$(aq) using copper electrodes, copper is dissolved at anode and deposited at cathode.

Reason: Oxidation takes place at anode and reduction at cathode.

A. Assertion and Reason both are correct statements and reason is the correct explanation of the assertion.

B. Assertion and Reason both are correct statements, but reason is not the correct explanation of the assertion.

C. Assertion is true, but reason is false.

D. Assertion is false, but reason is true.

Answer: A

Watch Video Solution

3. Assertion: In electrolysis of aqueous NaCl the product obtained is not H_2 gas.

Reason: Generally gases are liberated faster than the metals.

A. Assertion and Reason both are correct statements and reason is the correct explanation of the assertion.

B. Assertion and Reason both are correct statements, but reason is not the correct explanation of the assertion.

C. Assertion is true, but reason is false.

D. Assertion is false, but reason is true.

Answer: D

Watch Video Solution

4. STATEMENT-1 : Zinc and not copper is used in the recovery of silver from the complex $[Ag(CN)_2]^-$ and

STATEMENT-2 : Zinc is more powerful oxidising agent than copper.

A. Assertion and Reason both are correct statements and reason is the correct explanation of the assertion.

B. Assertion and Reason both are correct statements, but reason is not the correct explanation of the assertion.

C. Assertion is true, but reason is false.

D. Assertion is false, but reason is true.

Answer: A

Watch Video Solution