MATHS

BOOKS - TARGET PUBLICATION

QUADRATIC EQUATIONS

Examples

1. Classify the following polynominals as linear and quadratic:

(i) $5x + 9$

(ii) $x^2 + 3x - 5$

(iii) $3x - 7$

(iv) $3x^2 - 5x$

(v) $5x^2$

Watch Video Solution

2. Write the polynominals in the index form. Observe the coefficients.

$(i)x^2 + 3x - 5, (ii)3x^2 - 5x, (iii)5x^2,$

Watch Video Solution

3. Complete the following table:

Quadratic Equation	General form	a	b	c
$x^2 - 4 = 0$	$x^2 + 0x - 4 = 0$	1	0	–4
$y^2 = 2y - 7$	...	...	...	...
$x^2 + 2x = 0$	...	...	...	...

Watch Video Solution

4. Decided which of the following are quadratic equations ?

(i) $9y^2 + 5 = 0.$

Watch Video Solution

5. Decided which of the following are quadratic equations ?

(ii) $m^3 - 5m^2 + 4 = 0$

Watch Video Solution

6. Decide which of the following are quadratic equations :

$(m + 2)(m - 5) = 0$

Watch Video Solution

7. For the quadratic equation $2x^2 - x - 10 = 0$ check whether

(i) $x = -2$

are roots or not?

Watch Video Solution

8. For the quadratic equation $2x^2 - x - 10 = 0$ check whether

(ii) $x = \frac{-5}{2}$

are roots or not?

Watch Video Solution

9. One of the roots of the quadratic equation $kx^2 - 14x - 5 = 0$ is 5. Find the value of k .

Watch Video Solution

10. Find the factors of the following polynominals.

(i) $x^2 - 4x - 5$.

Watch Video Solution

11. Find the factors of the following polynominals.

(ii) $2m^2 - 5m.$

Watch Video Solution

12. Find the factors of the following polynominals.

(iii) $a^2 - 25.$

Watch Video Solution

13. Solve $x^2 - 9x + 20 = 0$ by factorisation method.

Watch Video Solution

14. Solve : $4x^2 + 5x + 1 = 0.$

Watch Video Solution

15. Determine nature of roots of the quadratic equation : $x^2 + 2x - 9 = 0.$

Watch Video Solution

16. If sum of the roots of quadratic equations is 10 and the product is 9, then form the quadratic equation:

Watch Video Solution

17. What will be the quadratic equation if $\alpha = 2, \beta = 5.$

Watch Video Solution

18. The product of two consecutive natural number is 240. Find the numbers.

Watch Video Solution

19. Classify the following polynominals as linear and quadratic:

(i) $5x + 9$

(ii) $x^2 + 3x - 5$

(iii) $3x - 7$

(iv) $3x^2 - 5x$

(v) $5x^2$

Watch Video Solution

20. Write the polynominals in the index form. Observe the coefficients.

$(i)x^2 + 3x - 5, (ii)3x^2 - 5x, (iii)5x^2,$

Watch Video Solution

21. Complete the following table:

Quadratic Equation	General form	a	b	c
$x^2 - 4 = 0$	$x^2 + 0x - 4 = 0$	1	0	–4
$y^2 = 2y - 7$	...	...	...	...
$x^2 + 2x = 0$	...	...	...	...

Watch Video Solution

22. Decided which of the following are quadratic equations ?

(i) $9y^2 + 5 = 0.$

Watch Video Solution

23. Decided which of the following are quadratic equations ?

(ii) $m^3 - 5m^2 + 4 = 0$

Watch Video Solution

24. Decided which of the following are quadratic equations ?

(iii) $(l + 2)(l - 5) = 0$

Watch Video Solution

25. For the quadratic equation $2x^2 - x - 10 = 0$ check whether

(i) $x = -2$

are roots or not?

Watch Video Solution

26. For the quadratic equation $2x^2 - x - 10 = 0$ check whether

(ii) $x = \frac{-5}{2}$

are roots or not?

Watch Video Solution

27. If $x = 5$ is a root of the equation $kx^2 - 14x - 5 = 0$, then find the value of k.

Watch Video Solution

28. Find the factors of the following polynominals.

(i) $x^2 - 4x - 5$.

Watch Video Solution

29. Find the factors of the following polynominals.

(ii) $2m^2 - 5m.$

Watch Video Solution

30. Find the factors of the following polynominals.

(iii) $a^2 - 25.$

Watch Video Solution

31. Solve $x^2 - 9x + 20 = 0$ by factorisation method.

Watch Video Solution

32. Solve : $4x^2 + 5x + 1 = 0.$

Watch Video Solution

33. Fill in the blanks : Phenomenon behind formation of rainbow is _____.

Watch Video Solution

34. Determine nature of roots of the quadratic equation : $x^2 + 2x - 9 = 0$.

Watch Video Solution

35. Write the quadratic equation if addition of the roots is 10 and product is 9.

Watch Video Solution

36. What will be the quadratic equation if $\alpha = 2, \beta = 5$.

Watch Video Solution

37. The product of two consecutive natural number is 240. Find the numbers.

Watch Video Solution

Try This

1. Solve the equation $2x^2 + 13x + 15 = 0$ by factorisation method,

by completing the square mathod and by using the formula.

Verify that you will get the same roots every time.

Watch Video Solution

2. Solve the equation $2x^2 + 13x + 15 = 0$ by factorisation method,

by completing the square mathod and by using the formula.

Verify that you will get the same roots every time.

Watch Video Solution

Practice Set 2 1

1. Write any two quadratic equations.

Watch Video Solution

2. Decide which of the following are quadratic equations :

$x^2 + 5x - 2 = 0$

Watch Video Solution

3. Decide which of the following are quadratic equations :

$y^2 = 5y - 10$

Watch Video Solution

4. Decide which of the following are quadratic equations :

$$y^2 + \frac{1}{y} = 2$$

Watch Video Solution

5. Decide which of the following are quadratic equations :

$$x + \frac{1}{x} = -2$$

Watch Video Solution

6. Decide which of the following are quadratic equations :

$(m+2)(m-5)=0$

Watch Video Solution

7. Decide which of the following are quadratic equations :

$m^3+3m^2-2=3m^3$

Watch Video Solution

8. Write the following equatratic equations in the form $ax^2 + bx + c = 0$. Write the value of a, b, c, for each equation.

$2y = 10 - y^2$

Watch Video Solution

9. Write the following equations in the form of $ax^2 + bx + c = 0$,

then write the values of a,b,c for each equation.

$(x - 1)^2 = 2x + 3$

Watch Video Solution

10. Write the following equations in the form of $ax^2 + bx + c = 0$,

then write the values of a,b,c for each equation.

$x^2 + 5x = -(3 - x)$

Watch Video Solution

11. Write the following equatratic equations in the form $ax^2 + bx + c = 0$. Write the value of a, b, c, for each equation.

$3m^2 = 2m^2 - 9$

Watch Video Solution

12. Write the following quatratic equations in the form

$ax^2 + bx + c = 0$. Write the value of a, b, c,

for each equation.

$p(3 + 6p) = -5$

Watch Video Solution

13. Write the following quatratic equations in the form

$ax^2 + bx + c = 0$. Write the value of a, b, c, for each equation.

$x^2 - 9 = 13$

Watch Video Solution

14. Determine whether the values given against each of the quadratic equations are the roots of the quadratic equation or not :

$x^2 + 4x - 5 = 0, x = 1, -1$

Watch Video Solution

15. Determine whether the value given against each of the quadratic equation are the roots of the equation.

(ii) $2m^2 - 5m = 0, m = 2, \frac{5}{2}.$

Watch Video Solution

16. Find k if x=3 is a root of equation $kx^2 - 10x + 3 = 0.$

Watch Video Solution

17. One of the roots of equation $5m^2 + 2m + k = 0$ is $-\frac{7}{5}$. find the value of 'k'.

Watch Video Solution

18. Write any two quadratic equations.

Watch Video Solution

19. Decided which of the following are quadratic equations.

(i)$x^2 + 5x - 2 = 0.$

Watch Video Solution

20. Decided which of the following are quadratic equations.

(ii) $y^2 = 5y - 10$

Watch Video Solution

21. Decided which of the following are quadratic equations.

(iii) $y^2 + \frac{1}{2} = 2.$

Watch Video Solution

22. Decided which of the following are quadratic equations.

(iv) $x + \frac{1}{x} = -2.$

Watch Video Solution

23. Decided which of the following are quadratic equations ?

(iii) $(l+2)(l-5) = 0$

Watch Video Solution

24. Decided which of the following are quadratic equations.

(vi) $m^3 + 3m^2 - 2 = 3m^3$.

Watch Video Solution

25. Write the following equations in the form $ax^2 + bx + c = 0$, then write the value of a, b,c for each equation.

(i)$2y = 10 - y^2$.

Watch Video Solution

26. Write the following equations in the form of $ax^2 + bx + c = 0$,

then write the values of a,b,c for each equation.

$(x-1)^2 = 2x + 3$

Watch Video Solution

27. Write the following equations in the form of $ax^2 + bx + c = 0$,

then write the values of a,b,c for each

equation.

$$x^2 + 5x = -(3 - x)$$

Watch Video Solution

28. Write the following equations in the form $ax^2 + bx + c = 0$, then write the value of a, b,c for each equation.

(iv)$3m^2 = 2m^2 - 9$

Watch Video Solution

29. Write the following quatratic equations in the form

$ax^2 + bx + c = 0$. Write the value of a, b, c, for each equation.

$p(3 + 6p) = -5$

Watch Video Solution

30. Write the following quatratic equations in the form

$ax^2 + bx + c = 0$. Write the value of a, b, c,

for each equation.

$x^2 - 9 = 13$

Watch Video Solution

31. Determine wheter the value given against each of the quadratic equation are the roots of the equation.

(i) $x^2 + 4x - 5 = 0, x = 1, -1$

Watch Video Solution

32. Determine whether the value given against each of the quadratic equation are the roots of the equation.

(ii) $2m^2 - 5m = 0, m = 2, \frac{5}{2}$.

Watch Video Solution

33. Find k if x=3 is a root of equation $kx^2 - 10x + 3 = 0$

Watch Video Solution

34. One of the roots of equation $5m^2 + 2m + k = 0$ is $-\frac{7}{5}$. find the value of 'k'.

Watch Video Solution

Practice Set 2 2

1. Solve the following quadratic equations by factorization.

$x^2 - 15x + 54 = 0$

Watch Video Solution

2. Solve the following quadratic equations by factorisation method:

$$x^2 + x - 20 = 0$$

Watch Video Solution

3. Solve the following quadratic equations by factorisation method:

$$2y^2 + 27y + 13 = 0$$

Watch Video Solution

4. Solve the following quadratic equations by factorization.

$$5m^2 = 22m + 15$$

Watch Video Solution

5. Solve the following quadratic equations by factorization.

$$2x^2 - 2x + \frac{1}{2} = 0$$

Watch Video Solution

6. Solve the following quadratic equations by factorisation method:

$$6x - \frac{2}{x} = 1$$

Watch Video Solution

7. Solve the quadratic equation by factorisation $\sqrt{2}x^2 + 7x + 5\sqrt{2} = 0$

Watch Video Solution

8. Solve the following quadratic equations by factorization.

$$3x^2 - 2\sqrt{6}x + 2 = 0$$

Watch Video Solution

9. Solve the following quadratic equations by factorization.

$$2m(m - 24) = 50$$

Watch Video Solution

10. Solve the following quadratic equations by factorization.

$7m^2 = 21m$

Watch Video Solution

11. Solve the following quadratic equation by factorisation.

(xii) $m^2 - 11 = 0.$

Watch Video Solution

12. Solve the following quadratic equation by factorisation.

(i) $x^2 - 15x + 54 = 0$.

Watch Video Solution

13. Solve the following quadratic equation by factorisation.

(ii)$x^2 + x - 20 = 0$

Watch Video Solution

14. Solve the following quadratic equation by factorization: $2y^2 + 27y + 13 = 0$

Watch Video Solution

15. Solve the following quadratic equation by factorisation.

(iv) $5m^2 = 22m + 15.$

Watch Video Solution

16. Solve the following quadratic equation by factorisation.

(v) $2x^2 - 2x + \frac{1}{2} = 0.$

Watch Video Solution

17. Solve the following quadratic equation by factorisation.

(vi) $6x - \frac{2}{x} = 1.$

Watch Video Solution

18. Complete the following activity to sovle the quadratic equation $\sqrt{2x^3} + 7x + 5\sqrt{2} = 0$ by factorisation method :

Watch Video Solution

19. Solve the following quadratic equation by factorisation.

(viii) $3x^2 - 2\sqrt{6}x + 2 = 0.$

Watch Video Solution

20. Solve the following quadratic equations by factorization.

$2m(m-24)=50$

Watch Video Solution

21. Solve the following quadratic equation by factorisation.

(xi) $7m^2=21m.$

Watch Video Solution

22. Solve the following quadratic equation by factorisation.

(xii) $m^2 - 11 = 0.$

Watch Video Solution

Practice Set 2 3

1. Solve the following quatratic equations by completing square

method :

$$x^2 + x - 20 = 0$$

Watch Video Solution

2. Solve the following quatratic equations by completing square

method :

$$x^2 + 2x - 5 = 0$$

Watch Video Solution

3. Solve the following quatratic equations by completing square

method : $m^2 - 5m = -3$

Watch Video Solution

4. Solve the following quadratic equations by completing the square method.

$9y^2 - 12y + 2 = 0$

Watch Video Solution

5. Solve the following quatratic equations by completing square method : $2y^2 + 9y + 10 = 0$

Watch Video Solution

6. Solve the following quatratic equations by completing square method :

$5x^2 = 4x + 7$

Watch Video Solution

7. Solve the following quatratic equations by completing square method :

$x^2 + x - 20 = 0$

Watch Video Solution

8. Solve the following quatratic equations by completing square method :

$x^2 + 2x - 5 = 0$

Watch Video Solution

9. Solve the following quatratic equations by completing square

method : $m^2 - 5m = -3$

Watch Video Solution

10. Solve the following quadratic equation by completing the square method.

(4) $9y^2 - 12y + 2 = 0$

Watch Video Solution

11. Solve the following quatratic equations by completing square method : $2y^2 + 9y + 10 = 0$

Watch Video Solution

12. Solve the following quatratic equations by completing square method :

$5x^2 = 4x + 7$

Watch Video Solution

Practice Set 2 4

1. Find the values of a,b,c for the following quadratic equations by comparing with standard form :

$x^2 - 7x + 5 = 0$

Watch Video Solution

2. Find the values of a,b,c for the following quadratic equations by comparing with standard form :

$2m^2 = 5m - 5$

Watch Video Solution

3. Compare the given quadratic equation to the general form and

write value of a,b,c

(iii) $y^2 = 7.$

Watch Video Solution

4. Solve using formula.

$x^2 + 6x + 5 = 0$

Watch Video Solution

5. Solve the following quadratic equations by using formula method :

$x^2 - 3x - 2 = 0$

Watch Video Solution

6. Solve the following quadratic equations by using formula method :

$3m^2 + 2m - 7 = 0$

Watch Video Solution

7. Solve the following quadratic equations by using formula method :

$5m^2 - 4m - 2 = 0$

Watch Video Solution

8. Solve the following quadratic equations by using formula method :

$$y^2 + \frac{1}{3}y = 2$$

Watch Video Solution

9. Find the roots of the quadratic equations by using the quadratic formula in each of the following

$$5x^2 + 13x + 8 = 0$$

Watch Video Solution

10. With the help of the flow chart given below solve the equation $x^2 + 2\sqrt{3}x + 3 = 0$ using formula.

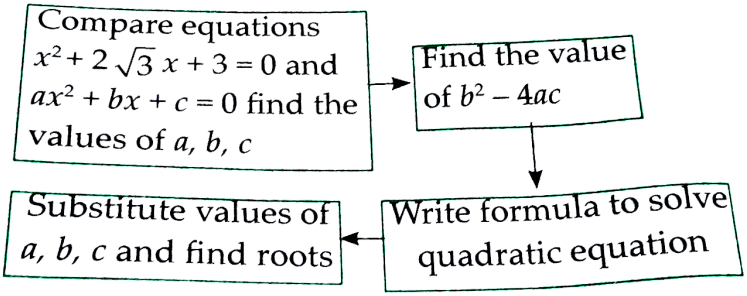

Watch Video Solution

11. Compare the given quadratic equation to the general form and write values of a, b, c:

$x^2 - 7x + 5 = 0$

Watch Video Solution

12. Compare the given quadratic equation to the general form and write values of a, b, c: $2m^2 = 5m - 5$

Watch Video Solution

13. Compare the given quadratic equation to the general form and

write value of a,b,c

(iii) $y^2 = 7.$

Watch Video Solution

14. Solve using formula.

(i) $x^2 + 6x + 5 = 0$

Watch Video Solution

15. Solve using formula.

(ii) $x^2 - 3x - 2 = 0$

Watch Video Solution

16. Solve using formula.

(iii)$3m^2 + 2m - 7 = 0$

Watch Video Solution

17. Solve using formula.

(iv)$5m^2 - 4m - 2 = 0$

Watch Video Solution

18. Solve using formula.

(v)$y^2 + \frac{1}{3}y = 2$

Watch Video Solution

19. Solve using formula.

(vi) $5x^2 + 13x + 8 = 0.$

Watch Video Solution

20. With the help of the flow chart below solve the equation $x^2 + 2\sqrt{3}x + 3 = 0$ using the formula.

Watch Video Solution

Practice Set 2 5

1. Fill in the gaps and complete.

(i)

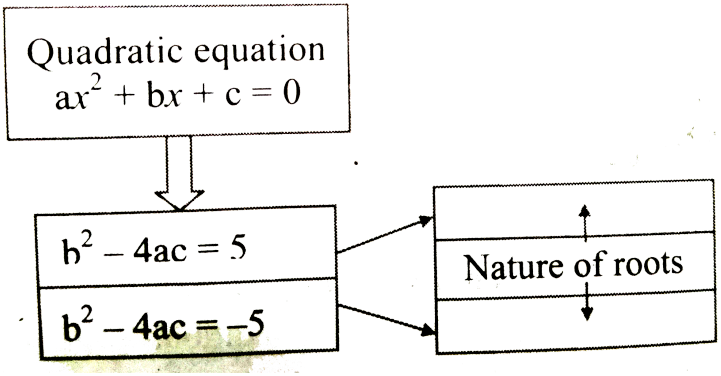

Watch Video Solution

2. Fill in the gaps and complete.

(ii)

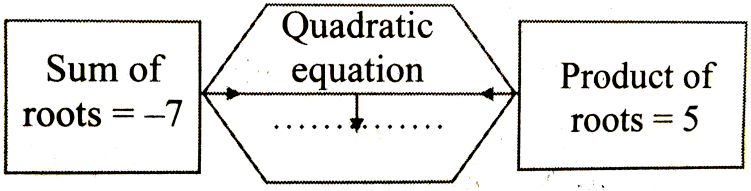

Watch Video Solution

3. Fill in the gaps and complete.

(iii)

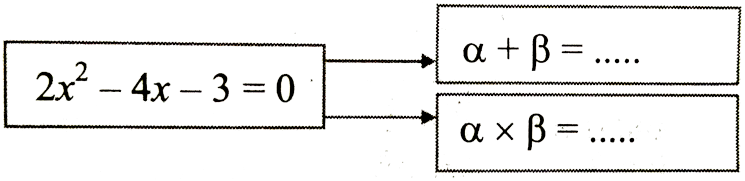

Watch Video Solution

4. Find the value of discriminant.

$$x^2 + 7x - 1 = 0$$

Watch Video Solution

5. Find the value of discriminant.

$$2y^2 - 5y + 10 = 0$$

Watch Video Solution

6. Find the value of discriminant.

$$\sqrt{2}x^2 + 4x + 2\sqrt{2} = 0$$

Watch Video Solution

7. Determine the nature of roots of the following quadratic equations.

$x^2 - 4x + 4 = 0$

Watch Video Solution

8. Determine the nature of roots of the following quadratic equations.

$2y^2 - 7y + 2 = 0$

Watch Video Solution

9. Determine the nature of roots of the following quadratic equations.

$$m^2 + 2m + 9 = 0$$

Watch Video Solution

10. Form the quadratic equation from the roots given below.

0 and 4

Watch Video Solution

11. Form the quadratic equation from the roots given below.

3 and -10

Watch Video Solution

12. Form the quadratic equation from the roots given below.

$\frac{1}{2}$ and $\frac{-1}{2}$

Watch Video Solution

13. Form the quadratic equation from the roots given below.

$2-\sqrt{5}$ and $2+\sqrt{5}$

Watch Video Solution

14. Sum of the roots of a quadratic equation is double their product.

Find k if equation is $x^2-4kx+k+3=0$.

Watch Video Solution

15. α, β are roots of $y^2 - 2y - 7 = 0$ find,

(i) $\alpha^2 + \beta^2$ (ii) $\alpha^3 + \beta^3$

Watch Video Solution

16. α, β are roots of $y^2 - 2y - 7 = 0$ find,

(i) $\alpha^2 + \beta^2$ (ii) $\alpha^3 + \beta^3$

Watch Video Solution

17. The roots of the each of the following quadratic equations are real and equal, find k.

$3y^2 + ky + 12 = 0$

Watch Video Solution

18. For what value of k, are the roots of the quadratic equation

$kx(x - 2) + 6 = 0$ equal ?

Watch Video Solution

19. Fill in the gaps and complete.

(i)

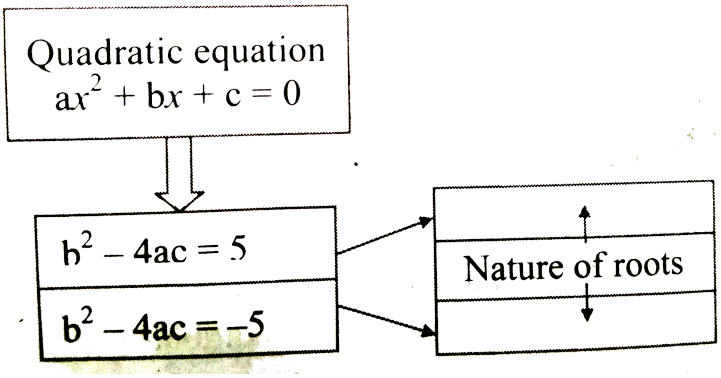

Watch Video Solution

20. Fill in the gaps and complete.

(ii)

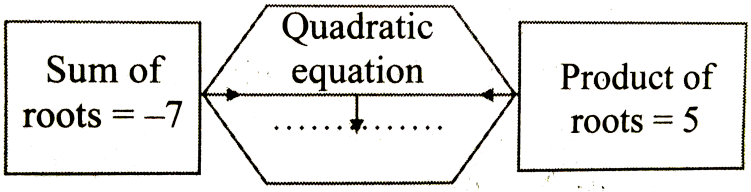

Watch Video Solution

21. Fill in the gaps and complete.

(iii)

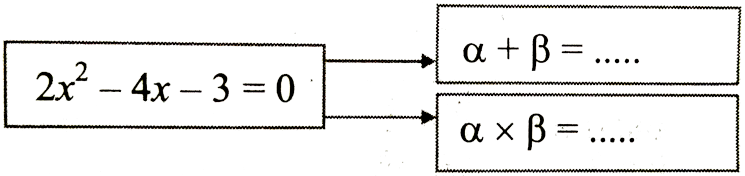

Watch Video Solution

22. Find the value of discriminant.

(i) $x^2 + 7x - 1 = 0$

Watch Video Solution

23. Find the value of discriminant.

(ii) $2y^2 - 5y + 10 = 0$

Watch Video Solution

24. Find the value of discriminant.

(iii) $\sqrt{2}x^2 + 4x + 2\sqrt{2} = 0$

Watch Video Solution

25. Determine the nature of roots of the following quadratic equations.

(i) $x^2 - 4x + 4 = 0$

Watch Video Solution

26. Determine the nature of roots of the following quadratic equations.

(ii) $2y^2 - 7y + 2 = 0$

Watch Video Solution

27. Determine the nature of roots of the following quadratic equations.

(iii)$m^2 + 2m + 9 = 0.$

Watch Video Solution

28. Form the quadratic equation from the roots given below.

(i) 0 and 4

Watch Video Solution

29. Form the quadratic equation from the roots given below.

(ii)$3 \text{ and } -10$

Watch Video Solution

30. Form the quadratic equation from the roots given below.

(iii) $\frac{1}{2}, \frac{1}{2}$

Watch Video Solution

31. Form the quadratic equation from the roots given below.

(iv)$2-\sqrt{5}, 2+\sqrt{5}$

Watch Video Solution

32. Sum of the roots of a quadratic equation is double their product.

Find k if equation is $x^2-4kx+k+3=0$.

Watch Video Solution

33. α, β are roots of $y^2 - 2y - 7 = 0$ find,

(i) $\alpha^2 + \beta^2$.

Watch Video Solution

34. α, β are roots of $y^2 - 2y - 7 = 0$ find,

(i) $\alpha^2 + \beta^2$.

Watch Video Solution

35. The roots of the each of the following quadratic equations are real and equal, find k.

$3y^2 + ky + 12 = 0$

Watch Video Solution

36. The roots of the following quadratic equation are real and equal. Find k.

$kx(x - 2) + 6 = 0$

Watch Video Solution

Practice Set 2 6

1. Product of Pragati's age 2 years ago and 3 years hence is 84.

Find her present age.

Watch Video Solution

2. The sum of squares of two consecutive even natural number is 244. Find the numbers.

Watch Video Solution

3. In the orange garden of Mr. Madhusudan there are 150 orange

trees. The number of tree in each row is 5 more than that in each column. Find the number of trees in each row and each column

with the help of following flow chart.

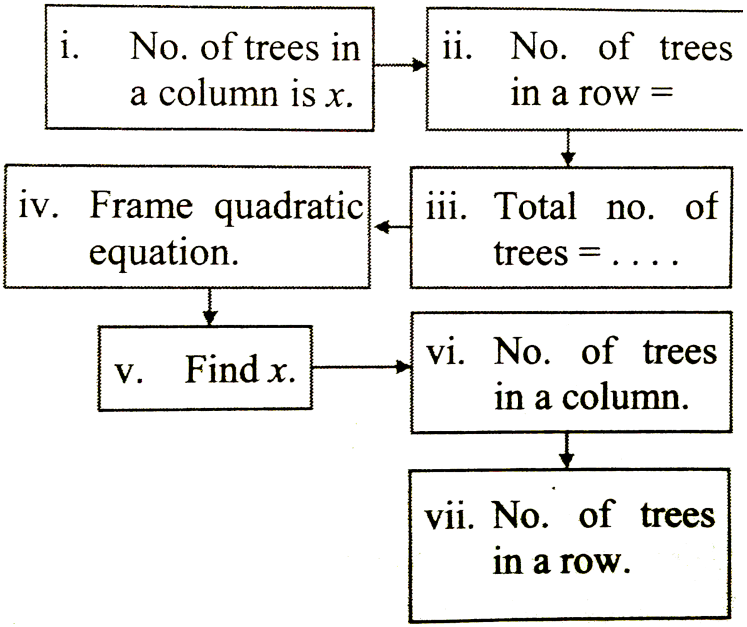

Watch Video Solution

4. Vivek is older than Kishor by 5 years. The sum of the reciprocals of their ages is $\frac{1}{6}$. Find their present age.

Watch Video Solution

5. Suyash scored 10 marks more in second test than that in first.

5 times the score of the second test is same as square of the score

in first test. Find his score in first test.

Watch Video Solution

6. Mr. Kasam runs a small business of making earthen pots.

He makes certain number of pots on daily basis. Production cost of each pot is Rs. 40 more than 10 times total number of pots,

he makes in one day. If production cost of all pots per day is Rs. 600, find production cost of one pot and number of pots he makes

per day.

Watch Video Solution

7. Pintu takes 6 days more than those of Nishu to complete certain

work. If they work togeter they finish it in 4 days. How many days would it take to complete the work if they work alone.

Watch Video Solution

8. If 460 is divided by a natural number, quotient is 6 more than 5

times the divisor and remainder is 1 then find quotient and divisor.

Watch Video Solution

9. In the given fig quadrilateral ABCD is a trapezium $AB \mid \mid CD$ and its area is $33cm^2$. From the information given in the figure find the lengths of all sides of the quadrilateral ABCD.

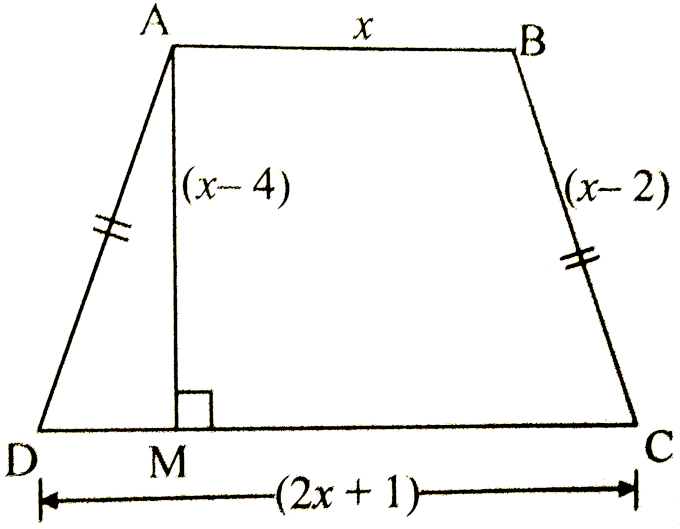

Watch Video Solution

10. Product of Pragati's age 2 years ago and 3 years hence is 84. Find her present age.

Watch Video Solution

11. The sum of squares of two consecutive even natural numbers is 244, find the numbers.

Watch Video Solution

12. In the orange garden of Mr. Madhusudan there are 150 orange

trees. The number of tree in each row is 5 more than that in each column. Find the number of trees in each row and each column with the help of following flow chart.

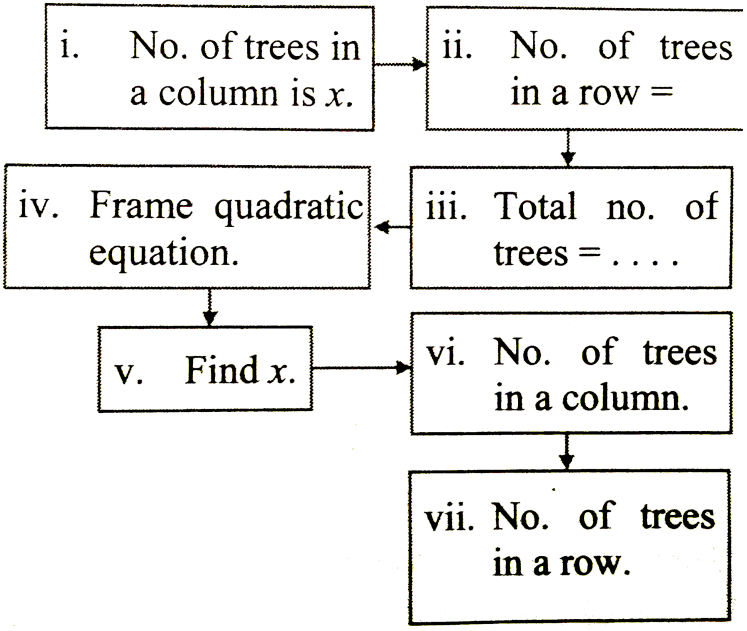

Watch Video Solution

13. Vivek is older than Kishor by 5 years. The sum of the reciprocals of their ages is $\frac{1}{6}$. Find their present ages.

Watch Video Solution

14. Suyash scored 10 marks more in second test than that in first.

5 times the score of the second test is same as

square of the score

in first test. Find his score in first test.

Watch Video Solution

15. Mr. Kasam runs a small business of making earthen pots.

He makes certain number of pots on daily basis. Production cost of each pot is Rs. 40 more than 10 times total number of pots,

he makes in one day. If production cost of all pots per day is Rs. 600, find production cost of

one pot and number of pots he makes

per day.

Watch Video Solution

16. Pratik takes 8 hours to travel 36 km downstream and return to same spot. The speed of boat in still water is 12km/hr. Find the speed of the water current.

Watch Video Solution

17. Pintu takes 6 days more than those of Nishu to complete certain

work. If they work togeter they finish it in 4 days. How many days would it take to complete the work if they work alone.

Watch Video Solution

18. If 460 is divided by a natural number, quotient is 6 more than 5

times the divisor and remainder is 1 then find quotient and divisor.

Watch Video Solution

19. In the given fig quadrilateral ABCD is a trapezium $AB \mid \mid CD$ and its area is $33cm^2$. From the information given in the figure find the lengths of all sides of the

quadrilateral ABCD.

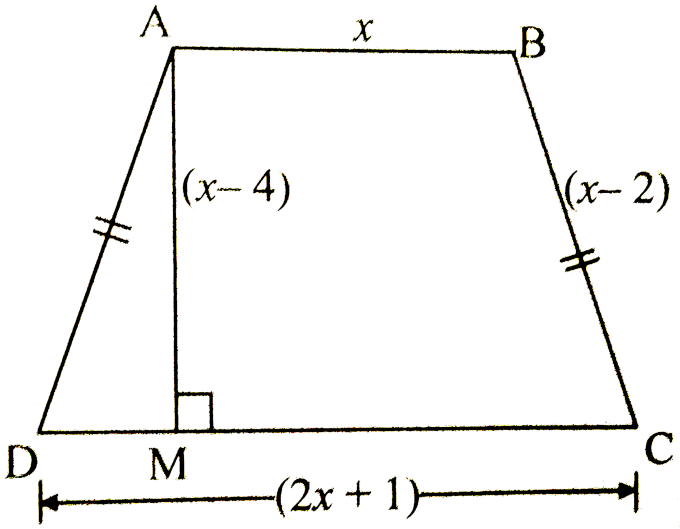

Watch Video Solution

Probelm Set 2

1. Which one is the quadratic equation?

A. (i) $\frac{5}{x} - 3 = x^2$

B. (ii) $x(x+5) = 2$

C. (iii) $n - 1 = 2n$

D. (iv) $\frac{1}{x^2}(x+2) = x$

Answer: B

Watch Video Solution

2. Out of the following equations which one is not a quadratic equation ?

A. (i) $x^2 + 4x = 11 + x^2$

B. (ii) $x^2 = 4x$

C. (iii) $5x^2 = 90$

D. (iv) $2x - x^2 = x^2 + 5$

Answer: A

Watch Video Solution

3. The roots of $x^2 + kx + k = 0$ are real and equal, find k.

A. (i) 0

B. (ii) 4

C. (iii) 0 or 4

D. (iv) 2

Answer: C

Watch Video Solution

4. Which of the following is the value of the discriminant for $\sqrt{2}x^2 - 5x + \sqrt{2} = 0$?

A. (i) -5

B. (ii) 17

C. (iii) $\sqrt{17}$

D. (iv) $2\sqrt{2}-5$

Answer: B

Watch Video Solution

5. Which of the following quadratic equations has roots 3,5 ?

A. (i) $x^2 - 15x + 8 = 0$

B. (ii) $x^2 - 8x + 15 = 0$

C. (iii) $x^2 + 3x + 5 = 0$

D. (iv) $x^2 + 8x - 15 = 0$

Answer: B

Watch Video Solution

6. Choose the correct answer for the following questions.

(vi) Out of the following equations, find the

equation having the sum

of its roots -5.

A. (i) $3x^2 - 15x + 3 = 0$

B. (ii) $x^2 - 5x + 3 = 0$

C. (iii) $x^2 + 3x - 5 = 0$

D. (iv) $3x^2 + 15x + 3 = 0$

Answer: D

Watch Video Solution

7. $\sqrt{5}m^2 - \sqrt{5}m + \sqrt{5} = 0$ which of the following statement is true for this given equation ?

A. (i) Real and unequal roots

B. (ii) Real and equal roots

C. (iii) Roots are not real

D. (iv) Three roots

Answer: C

Watch Video Solution

8. One of the roots of equation $x^2 + mx - 5 = 0$ is 2 find m.

A. (i) -2

B. (ii) $-\frac{1}{2}$

C. (iii) $\frac{1}{2}$

D. (iv) 2

Answer: C

Watch Video Solution

9. Which of the following are quadratic equations?

$x^2 + 2x + 11 = 0$

Watch Video Solution

10. Which of the following are quadratic equations?

$x^2 - 2x + 5 = x^2$

Watch Video Solution

11. Which of the following are quadratic equations?

$(x+2)^2 = 2x^2$

Watch Video Solution

12. Find the value of discriminant for each of the following equations.

$2y^2 - y + 2 = 0$

Watch Video Solution

13. Find the value of discriminant for each of the following equations.

$$5m^2 - m = 0$$

Watch Video Solution

14. Find the value of discriminant for each of the following equations.

$$\sqrt{5}x^2 - x - \sqrt{5} = 0$$

Watch Video Solution

15. If one root of the quadratic equation $2x^2 + kx - 2 = 0$ is -2, find the value of k.

Watch Video Solution

16. Two roots of quadratic equations are given, frame the equation.

10 and -10

Watch Video Solution

17. Two roots of quadratic equations are given, frame the equation.

$1 - 3\sqrt{5} \text{ and } 1 + 3\sqrt{5}$

Watch Video Solution

18. Two roots of quadratic equations are given, frame the equation.

0 and 7

Watch Video Solution

19. Determine the nature of roots for each of the quadratic equations.

$$3x^2 - 5x + 7 = 0$$

Watch Video Solution

20. Determine the nature of roots for each of the quadratic equations.

$$\sqrt{3}x^2 + \sqrt{2}x - 2\sqrt{3} = 0$$

Watch Video Solution

21. Determine the nature of roots for each of the quadratic equations.

$$m^2 - 2m + 1 = 0$$

Watch Video Solution

22. Solve the following quadratic equations :

$$\frac{1}{x+5} = \frac{1}{x^2}$$

Watch Video Solution

23. Solve the following quadratic equations:

$$x^2 - \frac{3x}{10} - \frac{1}{10} = 0$$

Watch Video Solution

24. Solve the following quadratic equations:

$$(2x + 3)^2 = 25$$

Watch Video Solution

25. Solve the following quadratic equations :

$$m^2 + 5m + 5 = 0$$

Watch Video Solution

26. Solve the following quadratic equations :

$$5m^2 + 2m + 1 = 0$$

Watch Video Solution

27. Find m, if the quadratic equation $(m-12)x^2+2(m-12)x+2=0$ has real and eqaul roots.

Watch Video Solution

28. The sum of two roots of a quadratic equation is 5 and the sum of

their cubes is 35. Find the equation.

Watch Video Solution

29. Find quadratic equation such that its roots are square of sum of the roots and square of difference of the roots of equation $2x^2 + 2(p+q)x + p^2 + q^2 = 0$

Watch Video Solution

30. Mukund possesses RS 50 more than what Sagar possesses. The product of the amount they have is numerically RS 15000. Find the amount each has.

Watch Video Solution

31. The difference between squares of two numbers is 120. The square of smaller number is twice the greater number. Find the numbers.

Watch Video Solution

32. Ranjana wants to distribute 540 oranges among some students. If

30 students were more each would get 3 oranges less. Find the number of students.

Watch Video Solution

33. Mr. Dinesh owns an agricultural farm at village Talvel. The length of the farm is 10 meter more than twice the breadth. In order to harvest rain water, he dug a square shape pond inside the farm. The side of pond is $\frac{1}{3}$ times of the breadth of the farm. The area of the farm is 20 times the area of the pond. Find

the length and breadth of the farm and of the pond.

Watch Video Solution

34. A tank fills completely in 2 hours if both the taps are open. If only one of the taps is open at the given time, the smaller tap takes 3 hours more than the larger one to fill the tank. How much times does each tap take to fill the tank completely?

Watch Video Solution

35. Which one is the quadratic equation?

A. $\frac{5}{x} - 3 = x^2$

B. $x(x+5) = 2$

C. $n - 1 = 2n$

D. $\frac{1}{x^2}(x+2) = x$

Answer: B

Watch Video Solution

36. Out of the following equations which one is not a quadratic equation ?

A. $x^2 + 4x = 11 + x^2$

B. $x^2 = 4x$

C. $5x^2 = 90$

D. $2x - x^2 = x^2 + 5$

Answer: A

Watch Video Solution

37. The roots of $x^2 + kx + k = 0$ are real and equal. Find K. a)0 b)4 c)0 or 4 d)2

A. 0

B. 4

C. 0 or 4

D. 2

Answer: C

Watch Video Solution

38. Choose the correct answer for the following questions.

(iv) For $\sqrt{2}x^2 - 5x + \sqrt{2} = 0$, find the value of the discriminant.

A. -5

B. 17

C. $\sqrt{17}$

D. $2\sqrt{2} - 5$

Answer: B

Watch Video Solution

39. Choose the correct answer for the following questions.

(v) Which of the following quadratic equations has roots, 3,5?

A. $x^2 - 15x + 8 = 0$

B. $x^2 - 8x + 15 = 0$

C. $x^2 + 3x + 5 = 0$

D. $x^2 + 8x - 15 = 0$

Answer: B

Watch Video Solution

40. Choose the correct answer for the following questions.

(vi) Out of the following equations, find the equation having the sum of its roots -5.

A. $3x^2 - 15x + 3 = 0$

B. $x^2 - 5x + 3 = 0$

C. $x^2 + 3x - 5 = 0$

D. $3x^2 + 15x + 3 = 0$

Answer: D

Watch Video Solution

41. $\sqrt{5}m^2 - \sqrt{5}m + \sqrt{5} = 0$ which of the following statement is true for this given equation ?

A. Real and unequal roots

B. Real and equal roots

C. Roots and not real

D. Three roots

Answer: C

Watch Video Solution

42. Choose the correct answer for the following questions.

(viii) One of the roots of equation $x^2 + mx - 5 = 0$ is 2, find m.

A. -2

B. $-\frac{1}{2}$

C. $\frac{1}{2}$

D. 2

Answer: C

Watch Video Solution

43. Which of the following equation is quadratic?

(i) $x^2 + 2x + 11 = 0.$

Watch Video Solution

44. Which of the following equation is quadratic?

(ii) $x^2 - 2x + 5 = x^2$.

Watch Video Solution

45. Which of the following equation is quadratic?

(iii) $(x + 2)^2 = 2x^2$

Watch Video Solution

46. Find the value of discriminat for each of the following equations.

(i) $2y^2 - y + 2 = 0.$

Watch Video Solution

47. Find the value of discriminat for each of the following equations.

(ii) $5m^2 - m = 0.$

Watch Video Solution

48. Find the value of discriminat for each of the following equations.

(iii)$\sqrt{5}x^2 - x - \sqrt{5} = 0.$

Watch Video Solution

49. One of the roots of quadratic equation $2x^2 + kx - 2 = 0$ is -2. Find k.

Watch Video Solution

50. Two roots of quadratic equations are given, frame the equation.

10 and -10

Watch Video Solution

51. Two roots of quadratic equations are given: frame the equation.

(ii) $1-3\sqrt{5}$ and $1+3\sqrt{5}$.

Watch Video Solution

52. Two roots of quadratic equations are given: frame the equation.

(iii) 0 and 7

Watch Video Solution

53. Determine the nature of roots for each of the quadratic equation.

(i) $3x^2 - 5x + 7 = 0$

Watch Video Solution

54. Determine the nature of roots for each of the quadratic equation.

(ii) $\sqrt{3}x^2 + \sqrt{2}x - 2\sqrt{3} = 0$

Watch Video Solution

55. Determine the nature of roots for each of the quadratic equations.

$m^2 - 2m + 1 = 0$

Watch Video Solution

56. Solve the following quadratic equations.

(i) $\frac{1}{x+5} = \frac{1}{x^2}$

Watch Video Solution

57. Solve the following quadratic equations.

(ii) $x^2 - \frac{3x}{10} - \frac{1}{10} = 0$

Watch Video Solution

58. Solve the following quadratic equations.

(iii) $(2x+3)^2 = 25$

Watch Video Solution

59. Solve the following quadratic equations.

(iv) $m^2 + 5m + 5 = 0$

Watch Video Solution

60. Solve the following quadratic equations.

(v) $5m^2 + 2m + 1 = 0$

Watch Video Solution

61. Solve the following quadratic equations :

$x^3 - 4x - 3 = 0$

Watch Video Solution

62. Find m if $(m-12)x^2+2(m-12)x+2=0$ has real and equal roots.

Watch Video Solution

63. The sum of two roots of a quadratic equation is 5 and sum of their cubes is 35. Find the equation.

Watch Video Solution

64. Find quadratic equation such that its roots are square of sum of the roots and square of difference of the roots of equation $2x^2 + 2(p+q)x + p^2 + q^2 = 0$

Watch Video Solution

65. Mukund possesses Rs. 50 more than what Sagar possesses. The product of the amount they have is 15,000. find the amount each one has.

Watch Video Solution

66. The difference between squares of two numbers is 120. The square of smaller number is twice the greater number. Find the numbers.

Watch Video Solution

67. Ranjana wants to distribute 540 oranges among some students. If 30 students were

more, each would get 3 oranges less. Find the number of students.

Watch Video Solution

68. Mr. Dinesh owns an agricultural farm at village Talvel. The length of the farm is 10 meter more than twice the breadth. In order to harvest rain water, he dug a square shape pond inside the farm. The side of pond is $\frac{1}{3}$ times of the breadth of the farm. The area of the farm is 20 times the area of the pond. Find

the length and breadth of the farm and of the pond.

Watch Video Solution

69. A tank fills completely in 2 hours if both the taps are open. If only one of the taps is open at the given time, the smaller tap takes 3 hours more than the larger one to fill the tank. How much times does each tap take to fill the tank completely?

Watch Video Solution

Multiple Choice Questions

1. Which of the following is not a quadratic equation?

A. (i) $4x^2 + 2x + 2 = 0$

B. (ii) $m + \frac{1}{m} = 5$

C. (iii) $(p + 10)(p - 5) = 0$

D. (iv) $\frac{q^2 + 1}{q^2} = 3q + 9$

Answer: D

Watch Video Solution

2. If the qudratic equation $3x + \frac{1}{x} = x + 3$ is written in standard form, then

A. (i) $a = 3, b = 3, c = 1$

B. (ii) $a = 3, b = -3, c = 1$

C. (iii) $a = 2, b = -3, c = 1$

D. (iv) $a = 3, b = -3, c = 3$

Answer: C

Watch Video Solution

3. Which of the following equation has 3 as a root?

A. (i) $3x^2 - 6x - 2 = 0$

B. (ii) $2x^2 - 5x - 3 = 0$

C. (iii) $2x^2 - 7x - 6 = 0$

D. (iv) $3x^2 - 10x - 8 = 0$

Answer: B

Watch Video Solution

4. If one root of the quadratic equation $p^2 - 3p + k = 0$ is 5, then the value of k is

A. (i) 0

B. (ii) 10

C. (iii) -10

D. (iv) 5

Answer: C

Watch Video Solution

5. The roots of the quadratic equation $x^2 + 5x + 6 = 0$ are

A. (i) $2, 3$

B. (ii) $-2, 3$

C. (iii) $2, \ -3$

D. (iv) $-2, \ -3$

Answer: D

Watch Video Solution

6. Solve: $4\sqrt{3}x^2 + 5x - 2\sqrt{3} = 0.$

A. (i) $\frac{\sqrt{3}}{4}, \frac{2}{\sqrt{3}}$

B. (ii) $\frac{\sqrt{3}}{4}, -\frac{2}{\sqrt{3}}$

C. (iii) $\frac{\sqrt{3}}{2}, \frac{2}{\sqrt{3}}$

D. (iv) $\frac{\sqrt{3}}{2}, -\frac{2}{\sqrt{3}}$

Answer: B

Watch Video Solution

7. Which term must be added and subtracted to solve the quadratic equation $3x^2 - 5x + 2 = 0$ by the method of completing the square?

A. (i) 25

B. (ii) $\frac{25}{4}$

C. (iii) $\frac{25}{9}$

D. (iv) $\frac{25}{36}$

Answer: D

Watch Video Solution

8. The roots of the quadratic equation $m^2 - 3m + 1 = 0$ are

A. (i) $3, 1$

B. (ii) $\frac{-3+\sqrt{5}}{2}, \frac{-3-\sqrt{5}}{2}$

C. (iii) $\frac{3+\sqrt{5}}{2}, \frac{3-\sqrt{5}}{2}$

D. (iv) $\frac{3+\sqrt{2}}{2}, \frac{3-\sqrt{2}}{2}$

Answer: C

Watch Video Solution

9. The discriminate (Δ) of the quadratic equation $3x^2 + 2x - 9 = 0$

is

A. (i) 112

B. (ii) -112

C. (iii) 56

D. (iv) 0

Answer: A

Watch Video Solution

10. If the discriminant (Δ) of the quadratic equation

$4x^2 + dx + 25 = 0$ is zero, then the value of d is / are

A. (i) 10

B. (ii) ± 10

C. (iii) 20

D. (iv) ± 20

Answer: D

Watch Video Solution

11. The roots of the qudratic equation $9x^2 - 6x + 1 = 0$ are

A. (i) real and equal

B. (ii) non real

C. (iii) real and unequal

D. (iv) none of these

Answer: A

Watch Video Solution

12. The roots of the equation $2x^2 - 6x + 3 = 0$ are

A. (i) real and equal

B. (ii) real and unequal

C. (iii) not real

D. (iv) none of these

Answer: B

Watch Video Solution

13. Which of the following equations has no real roots?

A. (i) $2x^2 - 3x + 5 = 0$

B. (ii) $3x^2 - 2x - 8 = 0$

C. (iii) $4x^2 + 4x + 1 = 0$

D. (iv) $3x^2 - 4x + 1 = 0$

Answer: A

Watch Video Solution

14. If α and β are the roots of the quadratic equation

$3m^2 + 2m - 4 = 0$, then $\alpha^2 + \beta^2 =$

A. (i) $\frac{28}{9}$

B. (ii) $\frac{-28}{9}$

C. (iii) $\frac{12}{9}$

D. (iv) $\frac{-12}{9}$

Answer: A

Watch Video Solution

15. If α and β are the roots of the quadratic equation

$x^2 - 3x - 2 = 0$, then $\frac{\alpha}{\beta} + \frac{\beta}{\alpha} =$

A. (i) $\frac{3}{2}$

B. (ii) $\frac{-3}{2}$

C. (iii) $\frac{13}{2}$

D. (iv) $\frac{-13}{2}$

Answer: D

Watch Video Solution

16. If the roots of a quadratic equation are -1 and 3, then the quadratic equation is

A. (i) $x^2 - 2x - 3 = 0$

B. (ii) $x^2 + 2x - 3 = 0$

C. (iii) $x^2 - 2x + 3 = 0$

D. (iv) $x^2 + 2x + 3 = 0$

Answer: A

Watch Video Solution

17. Which of the following is not a quadratic equation?

A. $4x^2 + 2x + 2 = 0$

B. $m + \frac{1}{m} = 5$

C. $(p + 10)(p - 5) = 0$

D. $\frac{q^2+1}{q^1} = 3q+9$

Answer: D

Watch Video Solution

18. If the qudratic equation $3x + \frac{1}{x} = x + 3$ is written in standard form, then

A. a=3,b=3,c=1

B. a=3,b=-3,c=1

C. a=2,b=-3,c=1

D. a=3,b=-3,c=3

Answer: C

Watch Video Solution

19. Which of the following equation has 3 as a root?

A. $3x^2 - 6x - 2 = 0$

B. $2x^2 - 5x - 3 = 0$

C. $2x^2 - 7x - 6 = 0$

D. $3x^2 - 10x - 8 = 0$

Answer: B

Watch Video Solution

20. If one root of the quadratic equation $p^2 - 3p + k = 0$ is 5, then the value of k is

A. 0

B. 10

C. -10

D. 5

Answer: C

Watch Video Solution

21. The roots of the quadratic equation $x^2 + 5x + 6 = 0$ are

A. 2,3

B. $-2, 3$

C. $2, \ -3$

D. $-2, \ -3$

Answer: D

Watch Video Solution

22. The roots of the quadratic equation $4\sqrt{3}x^2 + 5x - 2\sqrt{3} = 0$ are

A. $\frac{\sqrt{3}}{4}, \frac{2}{\sqrt{3}}$

B. $\frac{\sqrt{3}}{4}, -\frac{2}{\sqrt{3}}$

C. $\frac{\sqrt{3}}{2}, \frac{2}{\sqrt{3}}$

D. $\frac{\sqrt{3}}{2}, -\frac{2}{\sqrt{3}}$

Answer: B

Watch Video Solution

23. Which term must be added and subtracted to solve the quadratic equation $3x^2 - 5x + 2 = 0$ by the method of

completing the

square?

A. 25

B. $\frac{25}{4}$

C. $\frac{25}{9}$

D. $\frac{25}{36}$

Answer: D

Watch Video Solution

24. The roots of the quadratic equation $m^2 - 3m + 1 = 0$ are

A. $3, 1$

B. $\frac{-3+\sqrt{5}}{2}, \frac{-3-\sqrt{5}}{2}$

C. $\frac{3+\sqrt{5}}{2}, \frac{3-\sqrt{5}}{2}$

D. $\frac{3+\sqrt{2}}{2}, \frac{3-\sqrt{2}}{2}$

Answer: C

Watch Video Solution

25. The discriminate (Δ) of the quadratic equation $3x^2 + 2x - 9 = 0$ is

A. 112

B. -112

C. 56

D. 0

Answer: A

Watch Video Solution

26. If the discriminant (Δ) of the quadratic equation

$4x^2 + dx + 25 = 0$ is zero, then the value of d is / are

A. 10

B. ± 10

C. 20

D. ± 20

Answer: D

Watch Video Solution

27. The roots of the qudratic equation $9x^2 - 6x + 1 = 0$ are

A. real and equal

B. not real

C. real and unequal

D. none of these

Answer: A

Watch Video Solution

28. The roots of the equation $2x^2 - 6x + 3 = 0$ are

A. real and equal

B. real and unequal

C. not real

D. none of these

Answer: B

Watch Video Solution

29. Which of the following equations has no real roots?

A. $2x^2 - 3x + 5 = 0$

B. $3x^2 - 2x - 8 = 0$

C. $4x^2 + 4x + 1 = 0$

D. $3x^2 - 4x + 1 = 0$

Answer: A

Watch Video Solution

30. If α and β are the roots of the quadratic equation

$3m^2 + 2m - 4 = 0$, then $\alpha^2 + \beta^2 =$

A. $\frac{28}{9}$

B. $\frac{-28}{9}$

C. $\frac{12}{9}$

D. $\frac{-12}{9}$

Answer: A

Watch Video Solution

31. If α and β are the roots of the quadratic equation

$x^2 - 3x - 2 = 0$, then $\frac{\alpha}{\beta} + \frac{\beta}{\alpha} =$

A. $\frac{3}{2}$

B. $\frac{-3}{-2}$

C. $\frac{13}{2}$

D. $\frac{-13}{2}$

Answer: D

Watch Video Solution

32. If the roots of a quadratic equation are -1 and 3, then the quadratic equation is

A. $x^2 - 2x - 3 = 0$

B. $x^2 + 2x - 3 = 0$

C. $x^2 - 2x + 3 = 0$

D. $x^2 + 2x + 3 = 0$

Answer: A

Watch Video Solution

Additional Problems For Practice Based On Practice Set 2 1

1. Which of the following are qudratic equations?

(i) $x^2 - x - 5 = 0$

(ii) $y^2 + 4 = 3y - 1$

(iii) $3x^2 - 5x + 3 = 0$

(iv) $x - 3 = 4x$

(v) $(y - 2)(y + 2) = 0$

(vi) $p + 3 = \frac{1}{p^2}$

(vii) $\frac{3}{y} - 4 = y.$

Watch Video Solution

2. Write the following equations in the form

$ax^2 + bx + c = 0.$

Also, find the value of a,b and c.

(i) $t^2 - 3t = 4 - 2t.$

Watch Video Solution

3. Write the following equations in the form

$ax^2 + bx + c = 0.$

Also, find the value of a,b and c.

(ii) $x^2 - 3x = -1.$

Watch Video Solution

4. Write the following equations in the form

$ax^2 + bx + c = 0.$

Also, find the value of a,b and c.

(iii) $(x + 5)(x - 1) = 6$

Watch Video Solution

5. Write the following equations in the form

$ax^2 + bx + c = 0.$

Also, find the value of a,b and c.

(iv) $\frac{x^2 + 5}{x^2} = -3$

Watch Video Solution

6. Determine whether the value given against each of the qaudratic equation are the roots of the equation.

(i) $x^2 + 5x - 6 = 0, x = -6, 2.$

Watch Video Solution

7. What are the roots of the quadratic equation $2x^2 - 7x + 6 = 0$?

Watch Video Solution

8. Determine whether the value given against each of the qaudratic equation are the roots of the equation.

(iii) $x^2 + 3x - 4 = 0, x = 1, -2, -3.$

Watch Video Solution

9. Determine whether the value given against each of the qaudratic equation are the roots of the equation.

(iv) $(m+1)(m+3)=0, m=1, -1, 2.$

Watch Video Solution

10. If one root of the quadratic equation $kx^2 - 7x + 5 = 0$ is 1,

then find the value of k.

Watch Video Solution

11. Find k, one of the roots of the quadratic equation

$kx^2 - 7x + 12 = 0$ is 3.

Watch Video Solution

12. If one of the roots of the quadratic equation $x^2 - 7x + k = 0$ is 4,

then find the value of k.

Watch Video Solution

13. Which of the following are qudratic equations?

(i) $x^2 - x - 5 = 0$

(ii) $y^2 + 4 = 3y - 1$

(iii) $3x^2 - 5x + 3 = 0$

(iv) $x - 3 = 4x$

(v) $(y - 2)(y + 2) = 0$

(vi) $p + 3 = \frac{1}{p^2}$

(vii) $\frac{3}{y} - 4 = y.$

Watch Video Solution

14. Write the following equations in the form

$ax^2 + bx + c = 0.$

Also, find the value of a,b and c.

(i) $t^2 - 3t = 4 - 2t.$

Watch Video Solution

15. Write the following equations in the form

$ax^2 + bx + c = 0.$

Also, find the value of a,b and c.

(ii) $x^2 - 3x = -1.$

Watch Video Solution

16. Write the following equations in the form

$ax^2 + bx + c = 0.$

Also, find the value of a,b and c.

(iii) $(x + 5)(x - 1) = 6$

Watch Video Solution

17. Write the following equations in the form

$ax^2 + bx + c = 0.$

Also, find the value of a,b and c.

(iv) $\frac{x^2+5}{x^2} = -3$

Watch Video Solution

18. Determine whether the value given against each of the qaudratic equation are the roots of the equation.

(i) $x^2 + 5x - 6 = 0, x = -6, 2.$

Watch Video Solution

19. Determine whether the value given against each of the qaudratic equation are the roots of the equation.

(iii) $x^2 + 3x - 4 = 0, x = 1, -2, -3.$

Watch Video Solution

20. Determine whether the value given against each of the qaudratic equation are the roots of the equation.

(iv) $(m+1)(m+3) = 0, m = 1, -1, 2.$

Watch Video Solution

21. If one root of the quadratic equation

$kx^2 - 7x + 5 = 0$ is 1,

then find the value of k.

Watch Video Solution

22. Find k, one of the roots of the quadratic equation

$kx^2 - 7x + 12 = 0$ is 3.

Watch Video Solution

23. If one of the roots of the quadratic equation $x^2 - 7x + k = 0$ is 4,

then find the value of k.

Watch Video Solution

Additional Problems For Practice Based On Practice Set 2 2

1. Solve the following quadratic equation by factorisation method:

(i) $x^2 + 6x + 5 = 0.$

Watch Video Solution

2. Solve the following quadratic equation by factorisation method:

(ii) $x^2 + 10x + 24 = 0.$

Watch Video Solution

3. Solve the following quadratic equation using factorization method:

$x^2 + 11x + 24 = 0$

Watch Video Solution

4. Solve the following quadratic equation by factorisation method:

(iv) $m^2 - 14m + 13 = 0.$

Watch Video Solution

5. Solve the following quadratic equation by factorization method

$x^2 - 7x + 12 = 0$

Watch Video Solution

6. Solve the following quadratic equation by factorisation method:

(vi) $x^2 - 3x - 28 = 0.$

Watch Video Solution

7. Solve the following quadratic equation by factorisation method:

(vii) $q^2 - 2(7q + 16) = 0.$

Watch Video Solution

8. Solve the following quadratic equation by factorisation method:

(viii) $3y^2 = 15y.$

Watch Video Solution

9. Solve the following quadratic equation by factorisation method:

(ix) $x^2 = 3$

Watch Video Solution

10. Solve the following quadratic equation by factorisation method:

(x) $y^2 - 36 = 0.$

Watch Video Solution

11. Solve the following quadratic equation by factorisation method:

(xi) $t^2 - 49 = 0.$

Watch Video Solution

12. Solve the following quadratic equation by factorisation method:

(xii) $4x^2 - 1 = 0.$

Watch Video Solution

13. Solve the following quadratic equation by factorisation method:

(xiii) $9x^2 - 16 = 0$

Watch Video Solution

14. Solve the following quadratic equation by factorisation method:

(xiv) $3y^2 - 14y + 8 = 0.$

Watch Video Solution

15. Solve the following quadratic equation by factorisation method:

(xv) $3x^2 - x - 10 = 0.$

Watch Video Solution

16. Solve the following quadratic equation by factorisation method:

(xvi) $3x^2 - 29x + 40 = 0$

Watch Video Solution

17. Solve the following quadratic equation by factorisation method:

(xvii) $x + \frac{35}{x} = 12, x \neq 0.$

Watch Video Solution

18. Solve the following quadratic equation by factorisation method:

(xviii) $6\sqrt{3}x^2 + 7x = \sqrt{3}.$

Watch Video Solution

19. Solve the following quadratic equation by factorisation method:

(i) $x^2 + 6x + 5 = 0.$

Watch Video Solution

20. Solve the following quadratic equation by factorisation method:

(ii) $x^2 + 10x + 24 = 0.$

Watch Video Solution

21. Solve the following quadratic equation by factorisation method:

(iii) $x^2 + 11x + 24 = 0.$

Watch Video Solution

22. Solve the following quadratic equation by factorisation method:

(iv) $m^2 - 14m + 13 = 0.$

Watch Video Solution

23. Solve the following quadratic equation by factorisation method:

(v) $x^2 - 7x + 12 = 0.$

Watch Video Solution

24. Solve the following quadratic equation by factorisation method:

(vi) $x^2 - 3x - 28 = 0.$

Watch Video Solution

25. Solve the following quadratic equation by factorisation method:

(vii) $q^2 - 2(7q + 16) = 0.$

Watch Video Solution

26. Solve the following quadratic equation by factorisation method:

(viii) $3y^2 = 15y.$

Watch Video Solution

27. Solve the following quadratic equation by factorisation method:

(ix) $x^2 = 3$

Watch Video Solution

28. Solve the following quadratic equation by factorisation method:

(x) $y^2 - 36 = 0.$

Watch Video Solution

29. Solve the following quadratic equation by factorisation method:

(xi) $t^2 - 49 = 0.$

Watch Video Solution

30. Solve the following quadratic equation by factorisation method:

(xii) $4x^2 - 1 = 0.$

Watch Video Solution

31. Solve the following quadratic equation by factorisation method:

(xiii) $9x^2 - 16 = 0$

Watch Video Solution

32. Solve the following quadratic equation by factorisation method:

(xiv) $3y^2 - 14y + 8 = 0.$

Watch Video Solution

33. Solve the following quadratic equation by factorisation method:

(xv) $3x^2 - x - 10 = 0.$

Watch Video Solution

34. Solve the following quadratic equation by factorisation method:

(xvi) $3x^2 - 29x + 40 = 0$

Watch Video Solution

35. Solve the following quadratic equation by factorisation method:

(xvii) $x + \frac{35}{x} = 12, x \neq 0.$

Watch Video Solution

36. Solve the following quadratic equation by factorisation method:

(xviii) $6\sqrt{3}x^2 + 7x = \sqrt{3}.$

Watch Video Solution

Additional Problems For Practice Based On Practice Set 2 3

1. Solve following quadratic equations by completing the square method.

(i) $x^2 + 8x - 48 = 0.$

Watch Video Solution

2. Solve the following quadratic equation by completing square

method:

$$x^2 + 11x + 24 = 0$$

Watch Video Solution

3. Solve following quadratic equations by completing the square

method.

(iii) $m^2 + \frac{m}{2} - \frac{3}{2} = 0$

Watch Video Solution

4. Solve following quadratic equations by completing the square method.

(iv) $y^2 - 4y = 1.$

Watch Video Solution

5. Solve following quadratic equations by completing the square method.

(v) $x^2 - 6x + 4 = 0$

Watch Video Solution

6. Solve following quadratic equations by completing the square method.

(vi) $x^2 + 8x + 9 = 0$

Watch Video Solution

7. Solve the following quadratic equation by completing square: $z^2 + 4z - 7 = 0$.

Watch Video Solution

8. Solve following quadratic equations by completing the square

method.

(viii) $t^2 + 2t = t + 3$

Watch Video Solution

9. Solve following quadratic equations by completing the square

method.

(ix) $m^2 - 3m - 1 = 0$

Watch Video Solution

10. Solve following quadratic equations by completing the square

method.

$5x^2 - 4x - 3 = 0.$

Watch Video Solution

11. Solve following quadratic equations by completing the square

method.

(i) $x^2 + 8x - 48 = 0.$

Watch Video Solution

12. Solve the following quadratic equation by completing square

method:

$x^2 + 11x + 24 = 0$

Watch Video Solution

13. Solve following quadratic equations by completing the square method.

(iii) $m^2 + \frac{m}{2} - \frac{3}{2} = 0$

Watch Video Solution

14. Solve following quadratic equations by completing the square

method.

(iv) $y^2 - 4y = 1.$

Watch Video Solution

15. Solve following quadratic equations by completing the square

method.

(v) $x^2 - 6x + 4 = 0$

Watch Video Solution

16. Solve following quadratic equations by completing the square method.

(vi) $x^2 + 8x + 9 = 0$

Watch Video Solution

17. Solve the following quadratic equation by completing square: $z^2 + 4z - 7 = 0$.

Watch Video Solution

18. Solve following quadratic equations by completing the square method.

(viii) $t^2 + 2t = t + 3$

Watch Video Solution

19. Solve following quadratic equations by completing the square method.

(ix) $m^2 - 3m - 1 = 0$

Watch Video Solution

20. Solve following quadratic equations by completing the square method.

$5x^2 - 4x - 3 = 0.$

Watch Video Solution

Additional Problems For Practice Based On Practice Set 2 4

1. Solve the following quadratic equations by using formula.

(i) $m^2 - 14m + 13 = 0.$

Watch Video Solution

2. Solve the following quadratic equations by using formula.

(ii) $x^2 - 2x - 3 = 0.$

Watch Video Solution

3. Solve the following quadratic equations equation by using formula.

(iii) $m^2 - 3m - 10 = 0.$

Watch Video Solution

4. Solve the following quadratic equations equation by using formula.

(iv) $x^2 + x + 5 = 0.$

Watch Video Solution

5. Solve the following quadratic equations equation by using formula.

(v) $m^2 - \frac{1}{2}m - 3 = 0$

Watch Video Solution

6. Solve the following quadratic equations by using formula.

(vi) $3y^2 + 7y + 4 = 0$

Watch Video Solution

7. Solve the following quadratic equations by using formula.

(vii) $2x^2 + 5x + 2 = 0.$

Watch Video Solution

8. Solve the following quadratic equations by using formula.

(viii) $25x^2 + 30x + 9 = 0.$

Watch Video Solution

9. Solve the following quadratic equations by using formula.

(ix) $7p^2 - 5p - 2 = 0.$

Watch Video Solution

10. Solve the following quadratic equations by using formula.

(xiii) $x^2 - 3x = 2.$

Watch Video Solution

11. Solve the following quadratic equations by using formula.

(xi) $y^2 - 6y + 2 = 0.$

Watch Video Solution

12. Solve the following quadratic equations equation by using formula.

(xii) $x^2 + 10x + 2 = 0.$

Watch Video Solution

13. Solve the following quadratic equations by using formula method :

$x^2 - 3x - 2 = 0$

Watch Video Solution

14. Solve the following quadratic equations equation by using formula.

(xiv) $4x^2 + 7x + 2 = 0$

Watch Video Solution

15. Solve the following quadratic equation using formula method:

$6x^2 - 7x - 1 = 0.$

Watch Video Solution

16. Solve the following quadratic equation by factorisation method:

(iv) $m^2 - 14m + 13 = 0.$

Watch Video Solution

17. Solve the following quadratic equations by using formula.

(ii) $x^2 - 2x - 3 = 0.$

Watch Video Solution

18. Solve the following quadratic equations equation by using formula.

(iii) $m^2 - 3m - 10 = 0.$

Watch Video Solution

19. Solve the following quadratic equations equation by using formula.

(iv) $x^2 + x + 5 = 0.$

Watch Video Solution

20. Solve the following quadratic equations equation by using formula.

(v) $m^2 - \frac{1}{2}m - 3 = 0$

Watch Video Solution

21. Solve the following quadratic equations by using formula.

(vi) $3y^2 + 7y + 4 = 0$

Watch Video Solution

22. Solve the following quadratic equations by factorisation method :

$2x^2 + 5x + 2 = 0$

Watch Video Solution

23. Solve the following quadratic equations by using formula.

(viii) $25x^2 + 30x + 9 = 0.$

Watch Video Solution

24. Solve the following quadratic equations equation by using formula.

(ix) $7p^2 - 5p - 2 = 0.$

Watch Video Solution

25. Solve the following quadratic equations equation by using formula.

(x) $3q^2 - 2q = 8.$

Watch Video Solution

26. Solve the following quadratic equations equation by using formula.

(xi) $y^2 - 6y + 2 = 0.$

Watch Video Solution

27. Solve the following quadratic equations equation by using formula.

(xii) $x^2 + 10x + 2 = 0.$

Watch Video Solution

28. Solve using formula.

(ii) $x^2 - 3x - 2 = 0$

Watch Video Solution

29. Solve the following quadratic equations equation by using formula.

(xiv) $4x^2 + 7x + 2 = 0$

Watch Video Solution

30. Solve the following quadratic equations equation by using formula.

(xv) $7x + 1 = 6x^2$.

Watch Video Solution

Additional Problems For Practice Based On Practice Set 2 5

1. Find the value of discriminant of the following quadratic equations.

(i) $x^2 + 10x - 7 = 0.$

Watch Video Solution

2. Find the value of discriminant of the following quadratic equations.

(ii) $2x^2 - 3x + 5 = 0$

Watch Video Solution

3. Find the value of discriminant of the following quadratic equations.

(iii) $2m^2 + m - 1 = 0.$

Watch Video Solution

4. Find the value of discriminant of the following quadratic equations.

(iv) $3x^2 - 4\sqrt{3}x + 4 = 0.$

Watch Video Solution

5. Find the value of the discriminant (Δ) for the quadratic equation $x^2 + 7x + 6 = 0$

Watch Video Solution

6. Determine the nature of roots of the following quadratic equations.

(i) $9x^2 + 6x + 1 = 0.$

Watch Video Solution

7. Determine the nature of roots of the following quadratic equations.

(ii) $p^2 - \sqrt{3}p + 2 = 0.$

Watch Video Solution

8. Determine the nature of roots of the following quadratic equations.

(iii) $2x^2 - 3x - 2 = 0.$

Watch Video Solution

9. Determine the nature of roots of the following quadratic equations.

(iv) $2x^2 - 5x + 7 = 0.$

Watch Video Solution

10. Determine the nature of roots of the following quadratic equations.

(v) $\sqrt{3}x^2 + 2\sqrt{3}x + \sqrt{3} = 0.$

Watch Video Solution

11. If α and β are the roots of the quadratic equation

$2x^2 + 6x - 5 = 0$, then find $(\alpha + \beta)$ and $\alpha \times \beta$.

Watch Video Solution

12. Form the quadratic equation, if its roots are

(i) 10 and 3

Watch Video Solution

13. Form the quadratic equation, if its roots are

(ii) 4 and 5

Watch Video Solution

14. Form the quadratic equation, if its roots are

(iii) 5 and 7

Watch Video Solution

15. Form the quadratic equation, if the roots are

$3 \text{ and } 8$

Watch Video Solution

16. Form the quadratic equation if its roots are

3 and –4.

Watch Video Solution

17. Obtain a quadratic equation whose roots are -3 and -7.

Watch Video Solution

18. Form the quadratic equation, if its roots are

(vii) $4 \text{ and } \frac{2}{3}$

Watch Video Solution

19. Form the quadratic equation, if its roots are

(viii) $\frac{-25}{8}$ and $\frac{25}{8}$.

Watch Video Solution

20. Find k, if the roots of the quadratic equation $kx^2 - 4x + 4 = 0$ are equal

Watch Video Solution

21. Find the value (s) of k for which the given quadratic equations has real and equal roots:

(i) $9x^2 + 8kx + 16 = 0.$

Watch Video Solution

22. Find the value (s) of k for which the given quadratic equations has real and equal roots:

(ii) $kx\left(x - 2\sqrt{5}\right) + 10 = 0.$

Watch Video Solution

23. Find m, if the quadratic equation

$(m-1)x^2 - 2(m-1)x + 1 = 0$ has real

and equal roots.

Watch Video Solution

24. If α and β are the roots of the equation

$x^2 - 9x + 14 = 0$, find

(i) $\alpha^2 + \beta^2$

Watch Video Solution

25. If α and β are the roots of the equation $x^2 - 9x + 14 = 0$, find

(ii) $(\alpha - \beta)^2$.

Watch Video Solution

26. If α and β are the roots of quadratic equation $x^2 + 5x - 1 = 0$

then, find (i) $\alpha^3 + \beta^3$ (ii) $\alpha^2 + \beta^2$

Watch Video Solution

27. If α and β are the roots of quadratic equation $x^2 + 5x - 1 = 0$

then, find (i) $\alpha^3 + \beta^3$ (ii) $\alpha^2 + \beta^2$

Watch Video Solution

28. The difference between the roots of the equation

$x^2 - 13x + k = 0$ is 7, find k.

Watch Video Solution

29. Find k if the sum of the roots of the quadratic equation $4x^2 + 8kx + k + 9 = 0$ is equal to their product.

Watch Video Solution

30. If the sum of the roots of the quadratic equation is 3 and sum of

their cubes is 63, find the quadratic equation.

Watch Video Solution

31. Find the value of discriminant of the following quadratic equations.

(i) $x^2 + 10x - 7 = 0.$

Watch Video Solution

32. Find the value of discriminant of the following quadratic equations.

(ii) $2x^2 - 3x + 5 = 0$

Watch Video Solution

33. Find the value of discriminant of the following quadratic equations.

(iii) $2m^2 + m - 1 = 0.$

Watch Video Solution

34. Find the value of discriminant of the following quadratic equations.

(iv) $3x^2 - 4\sqrt{3}x + 4 = 0.$

Watch Video Solution

35. Find the value of the discriminant (Δ) for the quadratic equation $x^2 + 7x + 6 = 0$

Watch Video Solution

36. Determine the nature of roots of the following quadratic equations.

(i) $9x^2 + 6x + 1 = 0.$

Watch Video Solution

37. Determine the nature of roots of the following quadratic equations.

(ii) $p^2 - \sqrt{3}p + 2 = 0.$

Watch Video Solution

38. Determine the nature of roots of the following quadratic equations.

(iii) $2x^2 - 3x - 2 = 0.$

Watch Video Solution

39. Determine the nature of roots of the following quadratic equations.

(iv) $2x^2 - 5x + 7 = 0.$

Watch Video Solution

40. Determine the nature of roots of the following quadratic equations.

(v) $\sqrt{3}x^2 + 2\sqrt{3}x + \sqrt{3} = 0.$

Watch Video Solution

41. If α and β are the roots of the quadratic equation

$2x^2 + 6x - 5 = 0$, then find $(\alpha + \beta)$ and $\alpha \times \beta$.

Watch Video Solution

42. Form the quadratic equation, if its roots are

(i) 10 and 3

Watch Video Solution

43. Form the quadratic equation, if its roots are

(ii) 4 and 5

Watch Video Solution

44. Form the quadratic equation, if its roots are

(iii) 5 and 7

Watch Video Solution

45. Form the quadratic equation, if the roots are

$3 \text{ and } 8$

Watch Video Solution

46. From the quadratic equation, if its roots are

(v) 3 and -4

Watch Video Solution

47. From the quadratic equation, if its roots are

(vi) -3 and -7

Watch Video Solution

48. Form the quadratic equation, if its roots are

(vii) $4 \text{ and } \frac{2}{3}$

Watch Video Solution

49. Form the quadratic equation, if its roots are

(viii) $\frac{-25}{8}$ and $\frac{25}{8}$.

Watch Video Solution

50. Find k, if the roots of the quadratic equation $kx^2 - 4x + 4 = 0$ are equal

Watch Video Solution

51. Find the value (s) of k for which the given quadratic equations has real and equal roots:

(i) $9x^2 + 8kx + 16 = 0.$

Watch Video Solution

52. Find the value (s) of k for which the given quadratic equations has real and equal roots:

(ii) $kx\left(x - 2\sqrt{5}\right) + 10 = 0.$

Watch Video Solution

53. Find m, if the quadratic equation

$(m-1)x^2 - 2(m-1)x + 1 = 0$ has real

and equal roots.

Watch Video Solution

54. If α and β are the roots of the equation

$x^2 - 9x + 14 = 0$, find

(i) $\alpha^2 + \beta^2$

Watch Video Solution

55. If α and β are the roots of the equation $x^2 - 9x + 14 = 0$, find

(ii) $(\alpha - \beta)^2$.

Watch Video Solution

56. If α and β are the roots of quadratic equation $x^2 + 5x - 1 = 0$

then, find (i) $\alpha^3 + \beta^3$ (ii) $\alpha^2 + \beta^2$

Watch Video Solution

57. If α and β are the roots of quadratic equation $x^2 + 5x - 1 = 0$

then, find (i) $\alpha^3 + \beta^3$ (ii) $\alpha^2 + \beta^2$

Watch Video Solution

58. The difference between the roots of the equation

$x^2 - 13x + k = 0$ is 7, find k.

Watch Video Solution

59. Find k , if the sum of the roots of the quadratic euqation $4x^2 + 8kx + k + 9 = 0$ is equal to their product.

Watch Video Solution

60. If the sum of the roots of the quadratic equation is 3 and sum of

their cubes is 63, find the quadratic equation.

Watch Video Solution

Additional Problems For Practice Based On Practice Set 2 6

1. The product of Yusuf's age 5 years ago with his age 9 years later is 176. find Yusuf's present age.

Watch Video Solution

2. The product of two consecutive positive number is 182, find the number.

Watch Video Solution

3. Sanket purchesed a rectangular plot having area $200m^2$. Length of

the plot was 10m more than its breadth. Find the length and

breadth of the plot.

Watch Video Solution

4. The length of a rectangle is thrice as long as the side of a square.

The side of the square is 4 cm more than the width of the rectangle. Their areas being equal, find their dimensions.

Watch Video Solution

5. The sum of a number and its reciprocal is $\frac{10}{3}$, find the number(s).

Watch Video Solution

6. A natural number is greater than the other by 5. The sum of their squares is 73. find the numbers.

Watch Video Solution

7. The divisor and quotient of the number 6123 are same and the remainder is half the divisor. Find the divisor.

Watch Video Solution

8. There is a rectangular onion storehouse in the farm of Mr. Ratnakarrao at Tivasa. The length of rectangular base is more than its breadth by 7m and digonal is more than length by 1 m. Find length and breadth of the storehouse.

Watch Video Solution

9. From the same place at 7 a.m. A started walking in the north at the speed of $4km/hr$. After 1 hours B stated cycling in the east at a

speed of $8km/hr$. At what time they will be at a distance of 20 km apart from each other?

Watch Video Solution

10. The denominator of a fraction exceeds its numerator by 2. If one is added to both numerator and denominator, the difference between new and the original fraction is $\frac{1}{28}$. Find the original fraction with positive denominator.

Watch Video Solution

11. A train, travelling at a uniform speed for 360 km, would have taken

48 minutes less to travel the same distance if its speed were 5 km/h more. Find the original speed of the train.

Watch Video Solution

12. The area of a rectangular playground is 420 sq.m. If its length is increasing by 7m and breadth is decreased by 5m, the area remains

the same.Find the length and breadth of the playground.

Watch Video Solution

13. If the cost of bananas is increased by rupees 10 per dozen, one can get 3 dozen less for rupees 600. Find the original cost of one dozen of bananas.

Watch Video Solution

14. Anand takes 9 days more than his father to do a certain piece of

work. Together they can do the work in 6 days. How many days will Anand take to do that work alone?

Watch Video Solution

15. One tank can be filled up by two taps in 6 hours. The smaller tap

alone takes 5 hours more than the bigger tap

alone. Find the time required by each tap to fill the tank separately.

Watch Video Solution

16. The product of Yusuf's age 5 years ago with his age 9 years later is

176. find Yusuf's present age.

Watch Video Solution

17. The product of two consecutive positive number is 182, find the number.

Watch Video Solution

18. Sanket purchesed a rectangular plot having area $200m^2$. Length of

the plot was 10m more than its breadth. Find the length and

breadth of the plot.

Watch Video Solution

19. The length of a rectangle is thrice as long as the side of a square.

The side of the square is 4 cm more than the width of the rectangle. Their areas being equal, find their dimensions.

Watch Video Solution

20. The sum of a natural number and its reciprocal is $\frac{10}{3}$. Find the number.

Watch Video Solution

21. A natural number is greater than the other by 5. The sum of their squares is 73. find the numbers.

Watch Video Solution

22. The divisor and quotient of the number 6123 are same and the remainder is half the divisor. Find the divisor.

Watch Video Solution

23. There is a rectangular onion storehouse in the farm of Mr. Ratnakarrao at Tivasa. The length of rectangular base is more than its breadth by 7m and digonal is more than length by 1 m. Find length and breadth of the storehouse.

Watch Video Solution

24. From the same place at 7 a.m. A started walking in the north at the speed of $4km/hr$.

After 1 hours B stated cycling in the east at a speed of $8km/hr$. At what time they will be at a distance of 20 km apart from each other?

Watch Video Solution

25. The denominator of a fraction exceeds its numerator by 2. If one is added to both numerator and denominator, the difference between new and the original fraction is $\frac{1}{28}$. Find the original fraction with positive denominator.

Watch Video Solution

26. Solve the following questions.

(ii) A train travels 360 km with uniform speed. The speed of the train

is increased by $5km/hr$, it takes 48 minutes less to cover the same distance. Find the initial speed of the train.

Watch Video Solution

27. The area of a rectangular playground is 420 sq.m. If its length is increasing by 7m and breadth is decreased by 5m, the area remains the same.Find the length and breadth of the playground.

Watch Video Solution

28. If the cost of bananas is increased by rupees 10 per dozen, one can

get 3 dozen less for rupees 600. Find the

original cost of one dozen

of bananas.

Watch Video Solution

29. Anand takes 9 days more than his father to do a certain piece of

work. Together they can do the work in 6 days. How many days will Anand take to do that work alone?

Watch Video Solution

30. One tank can be filled up by two taps in 6 hours. The smaller tap alone takes 5 hours more than the bigger tap alone. Find the time required by each tap to fill the tank separately.

Watch Video Solution

Chapter Assessment

1. Choose the correct alternative.

(i) Which of the following is a quadratic equation?

A. (a) $x^2 + 3x + 1 = (x - 2)^2$

B. (b) $(x + 1)^2 = 5(x - 9)$

C. (c) $x^3 - 1 = 0$

D. (d) $5x + 9 = 0$

Answer:

Watch Video Solution

2. Choose the correct alternative.

(ii) If one root of the quadratic equation

$3x^2 - 12x + k = 0$ is 3,

then the value of k is

A. (a) 6

B. (b) -6

C. (c) 9

D. (d) -9

Answer:

Watch Video Solution

3. Choose the correct alternative.

(iii) Which of the following quadratic equations has roots $-2, 5$?

A. (a) $x^2 - 3x + 10$

B. (b) $x^2 - 3x - 10$

C. (c) $x^2 - 10x + 9$

D. (d) $x^2 - 10x - 9$

Answer:

Watch Video Solution

4. Solve the following question.

(i) Find the value of k for which the roots of quadratic equation $kx^2 + 2x + 3 = 0$ are real and equal.

Watch Video Solution

5. Solve the following question.

(ii) For the quadratic equation $m^2 + 5m - 14 = 0$, check whether $m = 3$ and $m = -7$ are the roots or not ?

Watch Video Solution

6. Complete the following activities.

(i) Classify the following polynominals as linear and quadratic polynominals:

$8x - 1, 3x^2, 5x^2 + 3x + 2, x - 2$

Linear polynomials	Quadratic polynomials

Watch Video Solution

7. Complete the following activities.

(ii) fill in the blanks

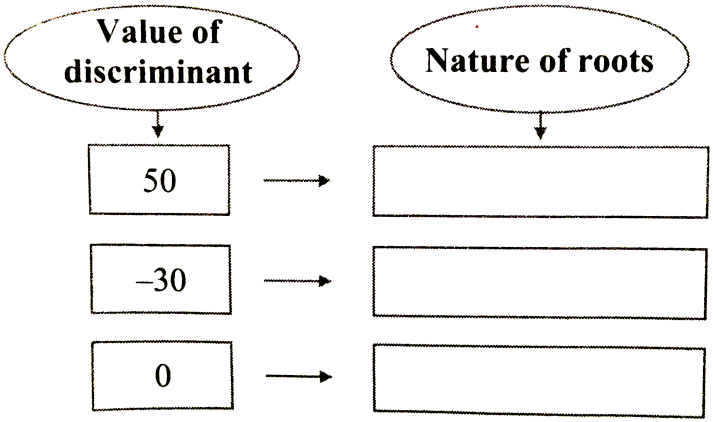

Watch Video Solution

8. If one root of the quadratic equation $3y^2 - ky + 8 = 0$ is $\frac{2}{3}$,

find the value of k.

Watch Video Solution

9. Solve the following questions

(ii) Solve the following quadratic equation by factroisation method.

$x^2 - 17x + 60 = 0.$

Watch Video Solution

10. Solve the following questions

(iii) Determine the nature of the roots of the quadratic equation $3x^2 + 9x + 4 = 0$.

Watch Video Solution

11. Solve the following questions

(iv) Form the quadratic equation, if its roots are 5 and -7.

Watch Video Solution

12. Solve the following questions.

(i) Solve the following qudratic equation by completing square:

$4m^2 - 12m = -7$

Watch Video Solution

13. Solve the following questions.

(ii) Find k, if the sum of the roots of the qudratic equation $3x^2 - (3k - 2)x - (k - 6) = 0$ is equal to their product.

Watch Video Solution

14. The product of two consecutive natural number is 132.find the numbers

Watch Video Solution

15. If $\alpha + \beta = 5$ and $\alpha^3 + \beta^3 = 35$, find the quadratic equation

whose roots are α and β.

Watch Video Solution

16. Solve the following questions.

(i) Suppose height of a right angled triangle is 1 less than two times its base. It's hypotenuse is 7 less than 3 times its base. Find all the sides of the right angled triangle.

Watch Video Solution

17. Solve the following questions.

(ii) The roots of the equation

$x^2 - 3ax + b = 0$ differ by 4, then

show that $9a^2 = 4b + 16$.

Watch Video Solution

18. Solve the following questions.

(i) Find the roots of the equation

$x^2 - 2x - 3 = 0$ by solving graphically.

Watch Video Solution

19. Solve the following questions.

(ii) A train travels 360 km with uniform speed. The speed of the train

is increased by $5km/hr$, it takes 48 minutes less to cover the same distance. Find the initial speed of the train.

Watch Video Solution

20. Choose the correct alternative.

(i) Which of the following is a quadratic

equation?

A. $x^2 + 3x + 1 = (x - 2)^2$

B. $(x + 1)^2 = 5(x - 9)$

C. $x^3 - 1 = 0$

D. $5x + 9 = 0$

Answer:

Watch Video Solution

21. Choose the correct alternative.

(ii) If one root of the quadratic equation $3x^2 - 12x + k = 0$ is 3,

then the value of k is

A. 6

B. -6

C. 9

D. -9

Answer:

Watch Video Solution

Watch video solution

22. Choose the correct alternative.

(iii) Which of the following quadratic equations has roots $-2, 5$?

A. $x^2 - 3x + 10$

B. $x^2 - 3x - 10$

C. $x^2 - 10x + 9$

D. $x^2 - 10x - 9$

Answer:

Watch Video Solution

23. Choose the correct alternative.

(iv) For $\sqrt{3}x^2 - 2\sqrt{2}x - 2\sqrt{3} = 0$, the value of the discriminant is

A. 24

B. -24

C. 32

D. -32

Answer:

Watch Video Solution

24. Solve the following question.

(i) Find the value of k for which the roots of quadratic equation $kx^2 + 2x + 3 = 0$ are real and equal.

Watch Video Solution

25. Solve the following question.

(ii) For the quadratic equation

$m^2 + 5m - 14 = 0$, check whether $m = 3$ and $m = -7$ are the roots or not ?

Watch Video Solution

26. Complete the following activities.

(i) Classify the following polynominals as linear and quadratic polynominals:

$8x - 1, 3x^2, 5x^2 + 3x + 2, x - 2$

Linear polynomials	Quadratic polynomials

Watch Video Solution

27. Complete the following activities.

(ii) fill in the blanks

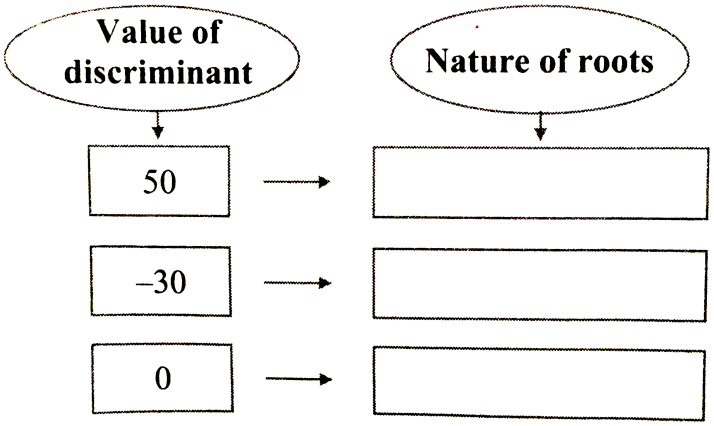

Watch Video Solution

28. If one root of the quadratic equation $3y^2 - ky + 8 = 0$ is $\frac{2}{3}$, then find the value of k.

Watch Video Solution

29. Solve the following questions

(ii) Solve the following quadratic equation by factroisation method.

$x^2 - 17x + 60 = 0.$

Watch Video Solution

30. Solve the following questions

(iii) Determine the nature of the roots of the quadratic equation $3x^2 + 9x + 4 = 0$.

Watch Video Solution

31. Solve the following questions

(iv) Form the quadratic equation, if its roots are 5 and -7.

Watch Video Solution

32. Solve the following questions.

(i) Solve the following qudratic equation by completing square:

$4m^2 - 12m = -7$

Watch Video Solution

33. Solve the following questions.

(ii) Find k, if the sum of the roots of the qudratic equation

$3x^2 - (3k - 2)x - (k - 6) = 0$ is equal to their product.

Watch Video Solution

34. The product of two consecutive natural number is 132.find the numbers

Watch Video Solution

35. If $\alpha + \beta = 5$ and $\alpha^3 + \beta^3 = 35$, find the quadratic equation

whose roots are α and β.

Watch Video Solution

36. Solve the following questions.

(i) Suppose height of a right angled triangle is

1 less than two times

its base. It's hypotenuse is 7 less than 3 times

its base. Find all the

sides of the right angled triangle.

Watch Video Solution

37. Solve the following questions.

(ii) The roots of the equation $x^2 - 3ax + b = 0$ differ by 4, then show that $9a^2 = 4b + 16$.

Watch Video Solution

38. Solve the following questions.

(i) Find the roots of the equation $x^2 - 2x - 3 = 0$ by solving graphically.

Watch Video Solution

39. Solve the following questions.

(ii) A train travels 360 km with uniform speed. The speed of the train

is increased by $5km/hr$, it takes 48 minutes less to cover the same distance. Find the initial speed of the train.

Watch Video Solution