PHYSICS

BOOKS - DC PANDEY ENGLISH

INTERFERENCE AND DIFFRACTION OF LIGHT

Example

1. In interference, two individual amplitudes are A_0 each and the intensity is I_0 each. Find resultant amplitude and intensity at a point, where:

(a) phase difference between two waves is 60°.

(b) path difference between two waves is $\frac{\lambda}{3}$.

Watch Video Solution

2. Three waves from three coherent sources meet at some point .

Resultant amplitude of each is A_0. Intensity corresponding to $A_0 is I_0$. Phase

difference between first wave and the second wave is 60° . Path difference

between first wave and the third wave is $\frac{\lambda}{3}$. The first wave lags behind in phase

angle from second and the third wave. Find resultant intensity at this point.

Watch Video Solution

3. Two waves of equal frequencies have their amplitudes in the

ratio of 3:5. They are superimposed on each other. Calculate the ratio of maximum and minimum intensities of the resultant wave.

Watch Video Solution

4. In interference, $\frac{I_{\max}}{I_{\min}} = \alpha$, find

(a) $\frac{A_{\max}}{A_{\min}}$ (b) $\frac{A_1}{A_2}$ (c) $\frac{I_1}{I_2}$.

Watch Video Solution

5. In YDSE, the two slits are separated by 0.1 mm and they are

0.5 m from the screen. The wavelength of light used is 5000 Å. Find the distance

between 7th maxima and 11 th mimima on the upper side of screen.

Watch Video Solution

6. Maximum intensity in YDSE is I_0. Find the intensity at a

point on the screen where

(a) The phase difference between the two interfering beams is $\frac{\pi}{3}$.

(b) the path difference between them is $\frac{\lambda}{4}$.

Watch Video Solution

7. White light is used to illuminate the two slits in a Young's double slit experiment. The separation between the slits is b and the screen is at

a distance $d(>>b)$ from the slits. At a point on the screen directly in front of

one of the slits, certain wavelengths are missing. Some of these missing wavelength are

A. $\lambda = b^2/d$

B. $\lambda = 2b^2/d$

C. $\lambda = b^2/3d$

D. $\lambda = 2b^2/3d$

Answer: A::C

Watch Video Solution

8. Bichromatic light is used in YDSE having wavelengths

$\lambda_1 = 400nm$ and $\lambda_2 = 700nm$. Find minimum order of bright fringe of

λ_1

which overlaps with bright fringe of λ_2 .

Watch Video Solution

9. In YDSE, bichromatic light of wavelengths 400 nm and 560 nm

are used. The distance between the slits is 0.1 mm and the distance

between the

plane of the slits and the screen is 1m. The minimum distance between

two

successive regions of complete darkness is

(a) 4mm (b) 5.6mm (c) 14 mm (d)28 mm .

A. $4mm$

B. $5.6mm$

C. $14mm$

D. $28mm$

Answer: D

Watch Video Solution

10. In YDSE, find the thickness of a glass slab $(\mu = 1.5)$ which

should be placed in front of the upper slit S_1 so that the central maximum now

lies at a point where 5th bright fringe was lying earlier (before inserting the

slab). Wavelength of light used is 5000Å.

Watch Video Solution

11. Interference fringes are produced by a double slit arrangement

and a piece of plane parallel glass of refractive index 1.5 is interposed in one of

the interfering beam. If the fringes are displaced through 30 fringe

widths for

light of wavelength $6 \times 10^{-5} cm$, find the thickness of the plate.

Watch Video Solution

12. A beam of light of wavelength 600 nm from a distant source

falls on a single slit 1.0 mm wide and the resulting diffraction pattern is observed on a screen 2m away. What is the distance between the first dark

fringe on either side of the central bright fringe?

Watch Video Solution

13. A parallel beam of monochromatic light of wavelength 450 nm passes through a long slit of width 0.2 mm. find the angular divergence in which most of the light is diffracted.

Watch Video Solution

Example Type 1

1. Calculate the minimum thickness of a soap bubble film $(\mu = 1.33)$that results in constructive interference in the reflected light if the film is illuminated with light whose wavelength in free space is $\lambda = 600nm$.

Watch Video Solution

2. In solar cells, a silicon solar cell $(\mu = 3.5)$ is coated with a thin film of silicon monoxide $SiO(\mu = 1.45)$ to minimize reflective losses from the surface.

Determine the minimum thickness of SiO that produces the least reflection at a

wavelength of 550nm, near the centre of the visible spectrum. Assume approximately normal incidence .

Watch Video Solution

Example Type 2

1. Distance between two slits is d. Wavelength of light is λ. There is a source of light S behind S_2 at a distance D_1. A glass slab of thickness t and

refractive index μ is kept in front of S_1. Find.

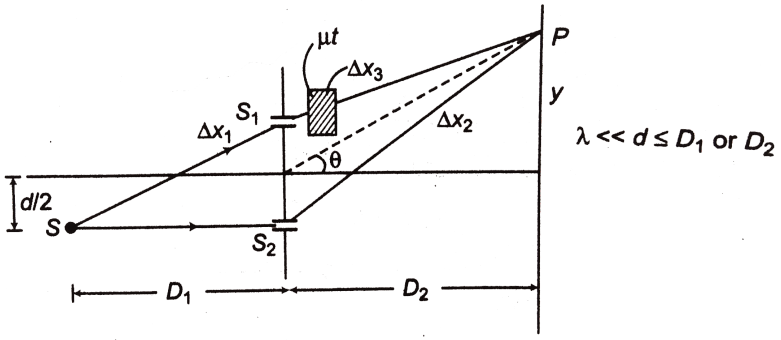

(a) Net path difference at point P at an angular position θ.

(b) Write the equation for finding two angular positions corresponding to second order

minima $(y_2 \text{ and } y_2')$.

If θ in part (b) does not come out to be small, then find two y-coordinates corresponding

to them.

View Text Solution

2. In the figure shown, a parallel beam of light (of wavelength λ_1 in medium μ_1) is incident at an angle θ. Distance $S_1O = S_2O$. Distance between the

slits is d.

$U \sin gd = 1mm, D = 1m$, theta = 30^@, lambda_1 = 0.3mm, mu_1 = 4//3 and mu_2= 10//9

, $f \in d(a)they - c\infty rd \in ateofthep\oint wherethe \to talphased \Leftrightarrow erencebe$

I_0`, then find the resultant intensity

at O.

Find y-coordinate of the nearest maxima above O.

View Text Solution

Example Type 3

1. In the YDSE apparatus shown in figure, $d < < D$ and $d = 6\lambda$. Find

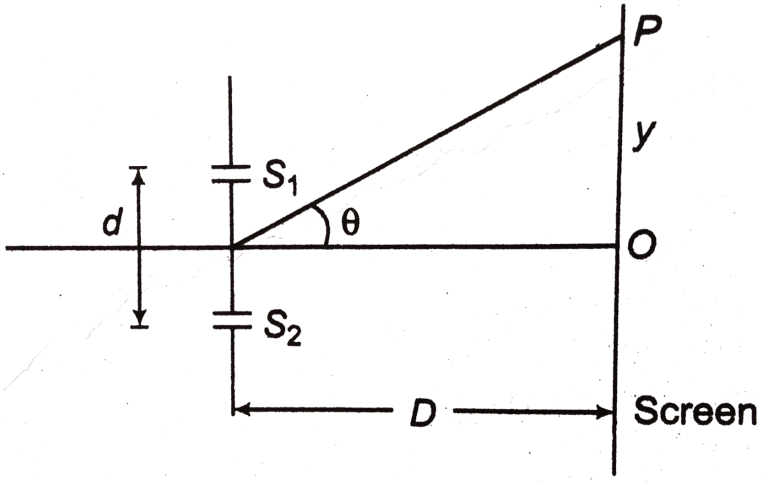

(a) total number of maximas and minimas on the screen .

(b) two y-coordinates corresponding to third order maxima.

Watch Video Solution

2. In the set up shown in figure dltltD and d=4lambda, find.

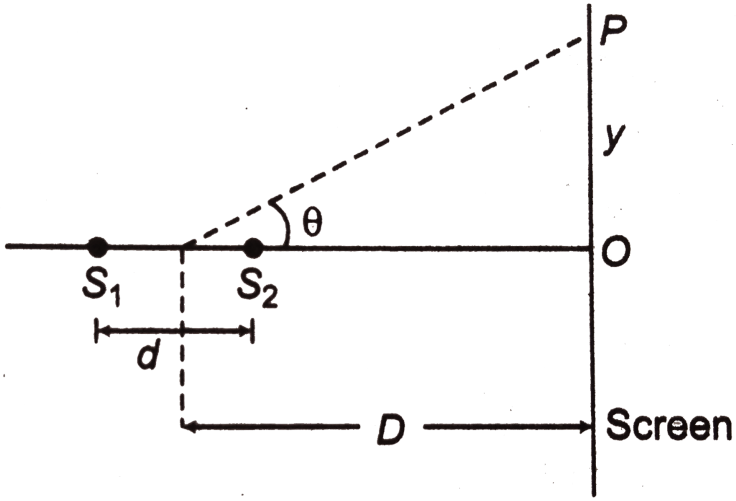

(a) total number of maximas and minimas on the screen

(b) y-coordinates corresponding to minima nearest to O.

Watch Video Solution

Type 3

1. There is a large circle (not a screen this time) around two coherent sources S_1 and S_2 kept at a distance $d = 3.4\lambda$.

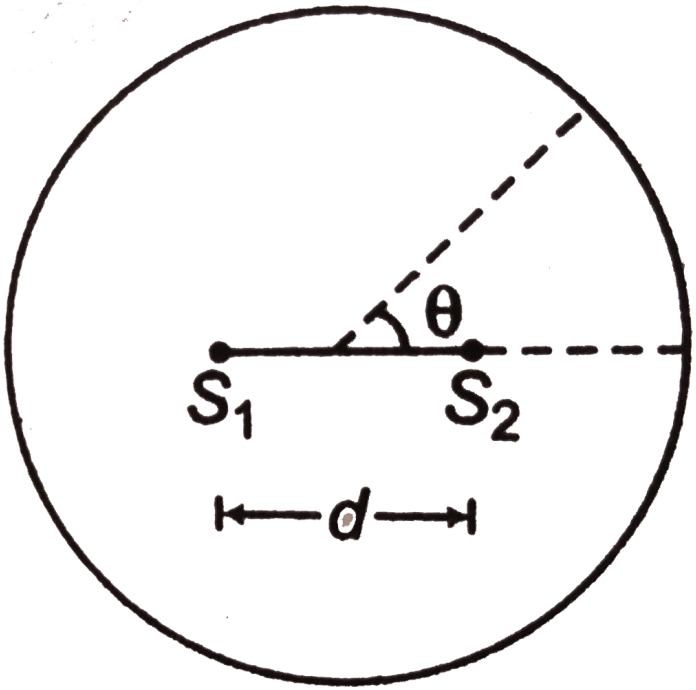

(a) Find total number of maximas on this circle.

(b) Four angular positions corresponding to third order maxima on this circle.

Watch Video Solution

Example Type 4

1. A source of light of wavelength 5000Å is placed as shown in figure.

Considering interference of direct and reflected rays, determine the position of the

region where the fringes will be visible and calculate the number of fringes.

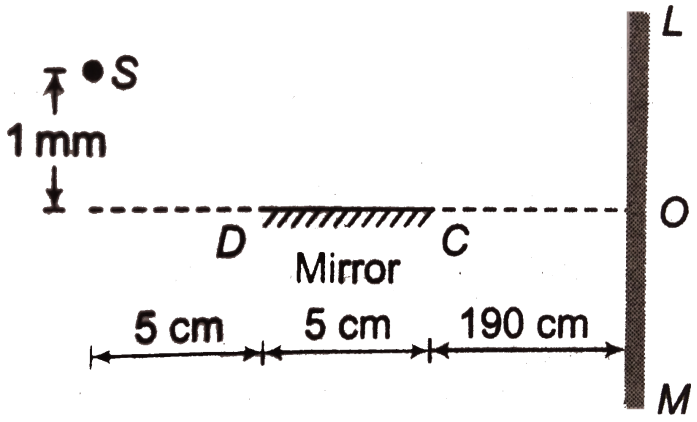

Watch Video Solution

Example Type 5

1. Consider the situation shown in figure. The two slite S_1 and S_2

placed symmetrically around the centre line are illuminated by a monochromatic

light of wavelength lambda. The separation between the slits is d. The light transmitted

by the slits falls on a screen M_1 placed at a distance D from the slits. The slit S_3 is

at the centre line and the slit S_4 is at a distance y form S_3. Another screen M_2 is

placed at a further distance D away from M_1. Find the ration of the maximum to

minimum intensity observed on M_2 if y is equal to $(d < < D)$.

`

Watch Video Solution

Type 5

1. Consider the arrangement shown in figure. By some mechanism,

the separation between the slits S_3 and S_4 can be changed. The intensity is

measured at the point P which is at the common perpendicular bisector of S_1S_2

and S_3S_4. When $z = \frac{D\lambda}{2d}$, the intensity measured at P is I. Find the intensity when

z is equal to

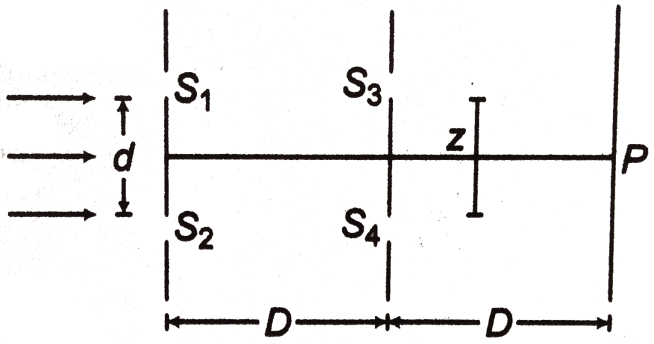

$(a)\frac{D\lambda}{d}(b)\frac{3D\lambda}{2d}(c)\frac{2D\lambda}{d}$.

Watch Video Solution

Example Type 6

1. The coherent point sources S_1 and S_2 vibrating in same phase emit light of wavelength λ. The separation between the sources is 2λ. Consider a line passingh through S_2 and perpendicular to the line S_1S_2. What is the smallest distance from S_2 where a minimum of intensity occurs due to interference of waves from the two sources?

Watch Video Solution

2. A screen is placed at $50cm$ from a single slit, which is illuminated with $600nm$ light. If separation between the first and third minima in the diffraction pattern is $3.0mm$, then width of the slit is:

Watch Video Solution

3. In a single slit diffraction experiment first minima for $\lambda_1 = 660nm$ coincides with first maxima for wavelength λ_2. Calculate the value of λ_2.

Watch Video Solution

Miscellaneous Examples

1. figure shows three equidistant slits illuminated by a monochromatic parallel beam of light. Let $BP_0 - AP_0 = \frac{\lambda}{3}$ and $D > > \lambda$.

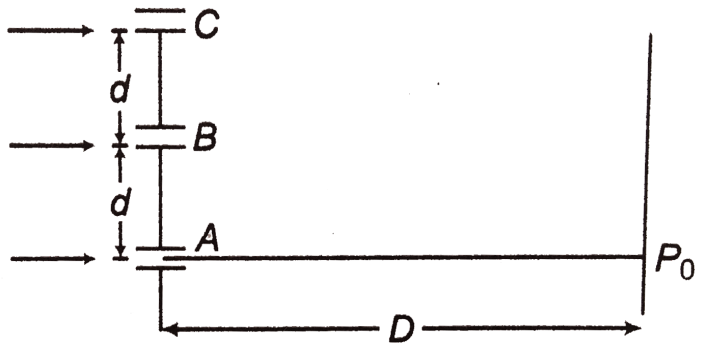

(a) Show that d = $\sqrt{(2\lambda D)/3}$

(b) Show that the intensity at P_0 is three times the intensity due to any of the three slits

individually.

Watch Video Solution

2. Young's double slit experiment is carried out using microwaves of wavelength $\lambda = 3cm$. Distance between the slits is $d = 5cm$ and the

distance

between the plane of slits and the screen is $D = 100cm$.

(a) Find total number of maxima and

(b) their positions on the screen.

Watch Video Solution

3. Two coherent sources are 0.3 mm apart. They are 0.9m away from the screen. The second dark fringe is at a distance of 0.3cm from the centre. Find the distance of fourth bright fringe from the centre. Also, find the wavelength of light used.

Watch Video Solution

4. In a Young's double slit set up, the wavelength of light used is 54nm. The distance of screen form slits is 1m. The slit separation is 0.3mm.

(a) Compare the intensity at a point P distant 10mm from the central fringe where the

intensity is I_0.

(b) Find the number of bright fringes between P and the central fringe.

Watch Video Solution

5. In a double slit pattern $(\lambda = 6000\text{Å})$, the first order and tenth order maxima fall at 12.50 mm and 14.75mm from a particular reference point. If λ is changed to 5500Å, find the position of zero order and tenth order fringes, other arrangements remaining the same.

Watch Video Solution

6. Two coherent narrow slits emitting light of wavelength λ in the same phase are placed parallel to each other at a small separation of 2λ. The light is collected on a screen S which is placed at a distance D(gtgtλ) from the slit S_1 as shown in figure. Find the finite distance x such that the

intensity at P is equal to intensity O.

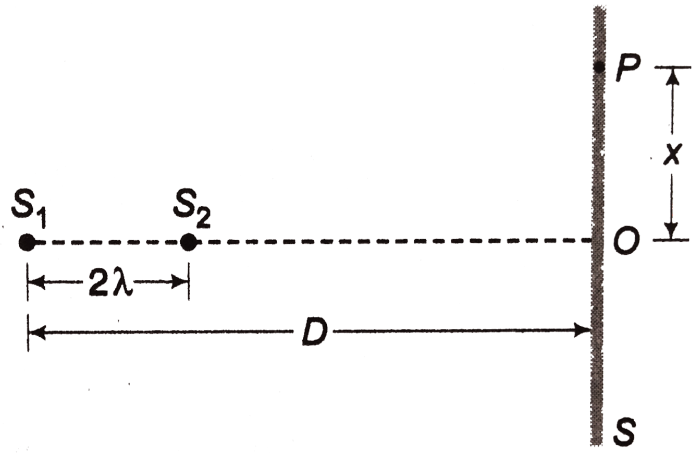

Watch Video Solution

7. An interference is observed due to two coherent sources S_1 placed at origin and S_2 placed at $(0, 3\lambda, 0)$. Here, lambda is the wavelength of the sources. A detector D is moved along the positive x-axis. Find x-coordinates on the x-axis (excluding $x = 0$ and $x = \infty$) where maximum intensity is observed.

Watch Video Solution

8. In a Young's double slit experiment, the light sources is at distance $l_1 = 20\mu m$ and $l_2 = 40\mu m$ form the main slit. The light of wavelength lambda = 500nm is incident on slits separated at a distance $10\mu m$. A screen is placed at a distance D = 2 away from the slits as shown in figure. Find

(a) the values of θ relative to the central line where maxima appear on the screen?

(b) how many maxima will appear on the screen?

what should be the minimum thickness of a slab of refractive index 1.5 placed on the path of one of the ray so that minima occurs at C ?

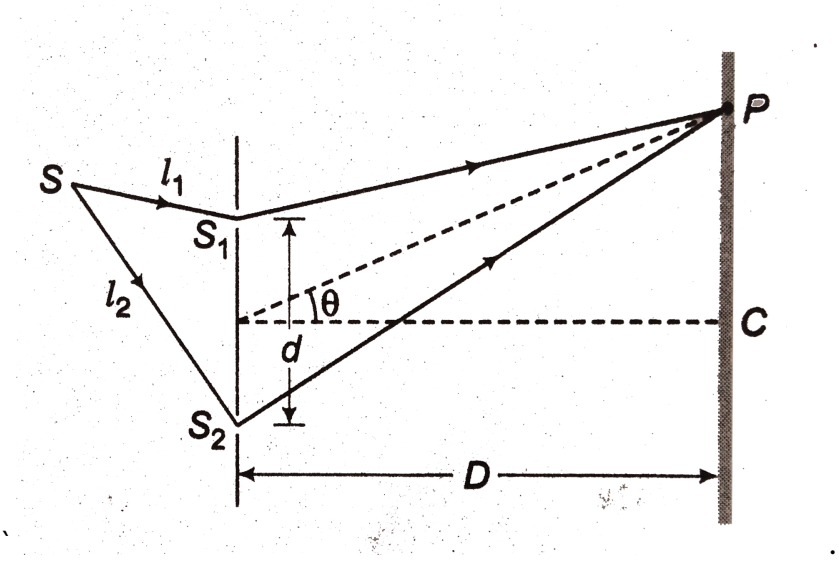

Watch Video Solution

Exercise 32 1

1. The ratio of intensities of two waves is 9:16. If these two waves interfere, then determine the ration of the maximum and minimum possible intensities.

Watch Video Solution

2. In interference, two individual amplitudes are 5 units and 3 units. Find (a) $\frac{A_{\max}}{A_{\min}}$ (b) $\frac{I_{\max}}{I_{\min}}$.

Watch Video Solution

3. Three waves due to three coherent sources meet at one point. Their amplitudes are $\sqrt{2}A_0, 3A_0$ and $\sqrt{2}A_0$. Intensity corresponding to A_0 is l_0. Phasse difference between first and second is 45°. Path difference between first and third is $\frac{\lambda}{4}$. In phase angle, first wave lags behind from the other two waves. Find resultant intensity at this point.

Watch Video Solution

Exercise 32 2

1. Explain why two flashlights held close together do not produce an interference pattern on a distant screen?

Watch Video Solution

2. Why it is so much easier to perform interference experiments with a laser than with an ordinary light source?

Watch Video Solution

3. In YDSE, D = 1.2m and d= 0.25cm, the slits are illuminated with coherent 600nm light. Calculate the distance y above the central maximum for which the average intensity on the screen is 75% of the maximum.

Watch Video Solution

4. Slit 1 of a double slit is wider than slit 2, so that the light from slit 1 has an amplitudes three times that of the light from slit 2. Show that equation $I = I_{\max}\cos^2\frac{\phi}{2}$ is replaced by the equation,

$$I = \left(\frac{I_{\max}}{4}\left(1 + 3\cos^2\left(\frac{\phi}{2}\right)\right)\right).$$

Watch Video Solution

5. In a two-slit interference pattern, the maximum intensity is l_0.

(a) At a point in the pattern where the phase difference between the waves from the two slits is 60°, what is the intensity?

(b) What is the path difference for 480nm light from the two slits at a point where the phase angle is 60°?

Watch Video Solution

6. Two waves of the same frequency and same amplitude 'a' are reaching a point simultaneously. What should be the phase difference between the waves so that the amplitude of the resultant wave be :

(i) 2a (ii) $\sqrt{2}a$ (iii) a (iv) zero.

Watch Video Solution

Level 1 Assertion And Reason

1. Assertion: Two identical waves due to two coherent sources interfere at a point with a phase difference of $\frac{2\pi}{3}$, then the resultant intensity at this point is equal to the individual intensity of the sources.

Reason: A phase difference of $\frac{2\pi}{3}$ is equivalent to a path difference of $\frac{\lambda}{3}$.

A. (a)If both Assertion and Reason are true and the Reason is correct explanation of the Assertion.

B. (b)If both Assertion and Reason are true and the Reason is not the correct explanation of the Assertion.

C. (c) If Assertion is true, but the Reason is false.

D. (d) If Assertion is false, but the Reason is true.

Answer: B

Watch Video Solution

2. Assertion: In the figure shown, zero order maxima will lie above point O.

Reason: Zero order maxima normally means a point where path difference is zero.

A. (a)If both Assertion and Reason are true and the Reason is correct explanation of the Assertion.

B. (b)If both Assertion and Reason are true and the Reason is not the correct explanation of the Assertion.

C. (c) If Assertion is true, but the Reason is false.

D. (d) If Assertion is false, but the Reason is true.

Answer: B

Watch Video Solution

3. Assertion: A monochromatic source of light is placed above a plane mirror as shown in figure. Fringes will be obtained at all points above O but not below it on the screen.

Reason: All reflected rays will suffer a phase difference of π.

A. (a)If both Assertion and Reason are true and the Reason is correct explanation of the Assertion.

B. (b)If both Assertion and Reason are true and the Reason is not the correct explanation of the Assertion.

C. (c) If Assertion is true, but the Reason is false.

D. (d) If Assertion is false, but the Reason is true.

Answer: B

Watch Video Solution

4. Assertion: If width of one slit in Young's double slit experiment is slightly increased, then maximum and minimum both intensities will increase.

Reason: Intensity reaching from that slit on screen will slightly increase.

A. (a)If both Assertion and Reason are true and the Reason is correct explanation of the Assertion.

B. (b)If both Assertion and Reason are true and the Reason is not the correct explanation of the Assertion.

C. (c) If Assertion is true, but the Reason is false.

D. (d) If Assertion is false, but the Reason is true.

Answer: A

Watch Video Solution

5. Assertion: If white light is used in place of monochromatic light in YDSE, then central point is white, although at other places coloured fringes will be obtained.

Reason: At centre, path difference is zero for all wavelengths. Hence, all wavelengths will interfere constructively.

A. (a)If both Assertion and Reason are true and the Reason is correct explanation of the Assertion.

B. (b)If both Assertion and Reason are true and the Reason is not the correct explanation of the Assertion.

C. (c) If Assertion is true, but the Reason is false.

D. (d) If Assertion is false, but the Reason is true.

Answer: A

Watch Video Solution

6. Assertion: A glass hemisphere is placed on a flat plate as shown. The observed interference fringes from this combination shall be circular.

Reason: In all cases fringes are circular.

A. (a)If both Assertion and Reason are true and the Reason is correct explanation of the Assertion.

B. (b)If both Assertion and Reason are true and the Reason is not the correct explanation of the Assertion.

C. (c) If Assertion is true, but the Reason is false.

D. (d) If Assertion is false, but the Reason is true.

Answer: C

Watch Video Solution

7. Assertion: Two coherent sources S_1 and S_2 are placed in front of a screen as shown in figure. At point P, 10th order maxima is obtained. Then

, 11th order maxima will be obtained above P.

Reason: For 11th order maxima path difference should be more.

A. (a)If both Assertion and Reason are true and the Reason is correct explanation of the Assertion.

B. (b)If both Assertion and Reason are true and the Reason is not the correct explanation of the Assertion.

C. (c) If Assertion is true, but the Reason is false.

D. (d) If Assertion is false, but the Reason is true.

Answer: D

Watch Video Solution

8. Assertion: Distance between two coherent sources S_1 and S_2 is 4λ. A large circle is drawn around these sources with centre of circle lying at centre of S_1 and S_2. There are total 16 maxima on this circle.

Reason: Total number of minimas on this circle are less, compared to total number of maximas.

A. (a)If both Assertion and Reason are true and the Reason is correct explanation of the Assertion.

B. (b)If both Assertion and Reason are true and the Reason is not the correct explanation of the Assertion.

C. (c) If Assertion is true, but the Reason is false.

D. (d) If Assertion is false, but the Reason is true.

Answer: C

Watch Video Solution

9. Assertion: In the YDSE apparatus shown in figure dltltD and $\frac{d}{\lambda} = 4$, then second order maxima will be obtained at $\theta = 30^\circ$

Reason: Total seven maxima will be obtained on screen.

A. (a)If both Assertion and Reason are true and the Reason is correct explanation of the Assertion.

B. (b)If both Assertion and Reason are true and the Reason is not the correct explanation of the Assertion.

C. (c) If Assertion is true, but the Reason is false.

D. (d) If Assertion is false, but the Reason is true.

Answer: B

Watch Video Solution

10. Assertion: White light is used in YDSE. Now, a glass slab is inserted in front of the slit S_1. Then, red fringe will shift less (in upward direction) compared to violet.

Reason: Refractive index for violet colour will be more.

A. (a)If both Assertion and Reason are true and the Reason is correct explanation of the Assertion.

B. (b)If both Assertion and Reason are true and the Reason is not the correct explanation of the Assertion.

C. (c) If Assertion is true, but the Reason is false.

D. (d) If Assertion is false, but the Reason is true.

Answer: D

Watch Video Solution

Level 1 Objective

1. Three coherent waves having amplitudes 12mm, 6mm and 4mm arrive at a given point with successive phase difference of $\frac{\pi}{2}$. Then, the amplitude of the resultant wave is

A. 7mm

B. 10mm

C. 5mm

D. 4.8mm

Answer: B

Watch Video Solution

2. Two coherent sources of intensity ratio β^2 interfere. Then, the value of $(I_{\max} - I_{\min})/(I_{\max} + I_{\min})$ is

A. $\frac{1+\beta}{\sqrt{\beta}}$

B. $\left(\frac{\sqrt{1+\beta}}{\beta}\right)$

C. $\frac{1+\beta}{\beta}$

D. None of these

Answer: D

Watch Video Solution

3. In Young's double slit experiment, distance between two sources is 0.1mm. The distance of screen from the sources is 20cm. Wavelength of light used is 5460Å. Then, angular position of first dark fringe is approximately

A. 0.08°

B. 0.16°

C. 0.20°

D. 0.32°

Answer: B

Watch Video Solution

4. Young's double slit experiment is made in a liquid. The tenth bright fringe in liquid lies in screen where 6th dark fringe lies in vacuum. The refractive index of the liquid is approximately

A. 1.8

B. 1.54

C. 1.67

D. 1.2

Answer: A

Watch Video Solution

5. A plane monochromatic light wave falls normally on a diaphragm with two narrow slits separated by 2.5mm. The fringe pattern is formed on a screen 100 cm behind the diaphragm. By what distance will these fringes be displaced, when one of the slits is covered by a glass plate $(\mu = 1.5)$ of thickness $10\mu m$?

A. 2mm

B. 1mm

C. 3mm

D. 4mm

Answer: A

Watch Video Solution

6. The distance of nth bright fringe to the nth dark fringe in Young's experiment is equal to

A. $\frac{3\lambda D}{2d}$

B. $\frac{2\lambda D}{d}$

C. $\frac{\lambda D}{2d}$

D. $\left(\lambda \frac{D}{d}\right)$

Answer: C

Watch Video Solution

7. When YDSE is conducted with white light, a white fringe is observed at the centre of the screen. When the screen is moved towards the slits by 5mm, then this white fringe

A. does not move

B. becomes red

C. disappears

D. Nothing can be said

Answer: A

Watch Video Solution

8. In Young,s double slit experimentm, 60 fringes are observed in the central view zone with light of wavelength 4000Å, The number of fringes that will be observed in the same view zone with the light of wavelength 6000Å, is

A. 40

B. 90

C. 60

D. None of these

Answer: A

Watch Video Solution

9. In a two slit experiment with monochromatic light, fringes are obtained on a screen placed at some distance from the slits . If the screen is moved by $5 \times 10^{-2} m$, towards the slits, the change in fringe width is 3×10^{-5} m. If separation between the slits is 10^{-3}m, the wavelength of light used is

A. 6000Å

B. 5000Å

C. 3000Å

D. 4500Å

Answer: A

Watch Video Solution

10. The ratio of maximum to minimum intensity due to superposition of two waves is $\frac{49}{9}$. Then, the ratio of the intensity of component waves is.

A. 25/4

B. `5/4

C. 25/6

D. 7/5`

Answer: A

Watch Video Solution

11. With two slits spaced 0.2 mm apart and a screen at a distance of 1 m, the third bright fringe is found to be at 7.5 mm from the central fringe. The wavelength of light used is

A. 400nm

B. 500nm

C. 550nm

D. 600nm

Answer: B

Watch Video Solution

Objective Question

1. A beam of light consisting of two wavelengths 6500Å and 5200Å is used to obtain interference fringes in YDSE. The distance between slits is 2mm and the distance of the screen form slits is 120 cm. What is the least

distance from central maximum where the bright due to both wavelengths coincide?

A. 0.156cm

B. 0.312cm

C. 0.078cm

D. 0.468cm

Answer: A

Watch Video Solution

2. A beam of light parallel to central line AB is incident on the plane of slits. The number of minimum, obtained on the large screen is n_1. Now if the beam is tilted by some angle $(\neq 90^\circ)$ as shown in figure, then the number of minima obtained is n_2. Then,

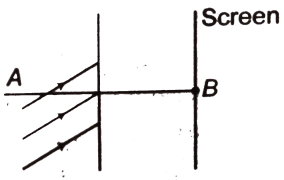

A. $n_1 = n_2$

B. $n_1 > n_2$

C. $n_2 > n_1$

D. n_2 will be zero.

Answer: A

Watch Video Solution

Level 1 Subjective

1. Two waves of equal frequencies have their amplitude in the ratio of 5:3. They are superimposed on each other. Calculate the ratio of the maximum to minimum intensities of the resultant wave.

Watch Video Solution

2. A radio transmitting station operating at a frequency of 120 MHz has two identical antennas that radiate in phase. Antenna B is 9 m to the right of antenna A. consider point P at a horizontal distance x to the right of antenna A as shown in figure. The value of x and order for which the constructive interference will occur at point P are

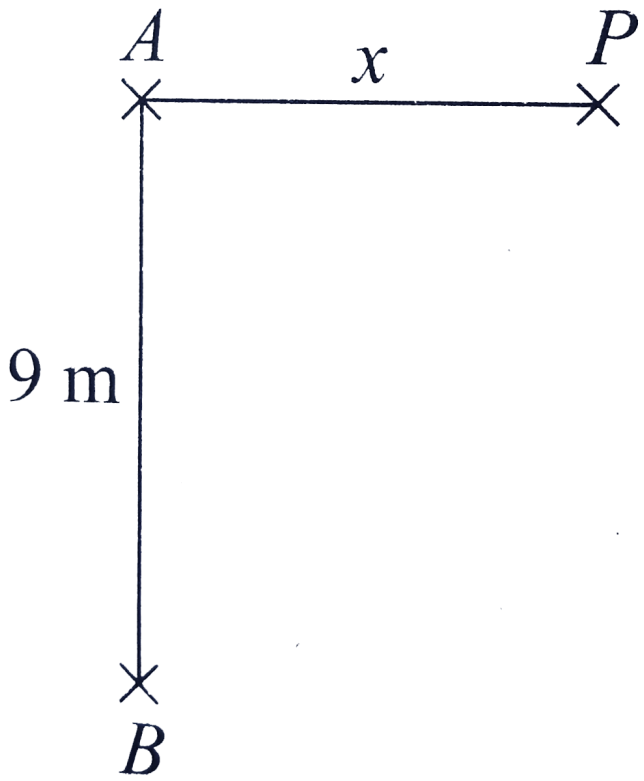

Watch Video Solution

3. Coherent light from a sodium-vapour lamp is passed through a filter that blocks everything except for light of a single wavelength. It then falls on two slits separated by 0.460 mm. In the resulting interference pattern on a screen 2.20m away, adjacent bright fringes are separated by 2.82 mm. What is the wavelength ?

Watch Video Solution

4. Find the angular separation between the consecutive bright fringes in a Young's double slit experiment with blue-green light of wavelength 500 nm. The separation between the slits is 2.0×10^{-3} m.

Watch Video Solution

5. A Young's double slit apparatus has slits separated by 0.25mm and a screen 48cm away from the slits. The whole apparatus is immersed in water and the slits are illuminated by the red light ($\lambda = 700nm$ in

vacuum.) Find the fringe width of the pattern formed on the screen. $(\mu_w = 4/3)$

Watch Video Solution

6. In a double slit experiment, the distance between the slits is 5.0 mm and the slits are 1.0m from the screen. Two interference patterns can be seen on the screen one due to light with wavelength 480nm, and the other due to light with wavelength 600nm. What is the separation on the screen between the third order bright fringes of the two intergerence patterns?

Watch Video Solution

7. Two slits spaced 0.450nm apart are placed 75.0 cm from a screen. What is the distance between the second and third dark lines of the interference pattern on the screen when the slits are illuminated with coherent light with a wavelength of 500nm?

Watch Video Solution

Watch Video Solution

8. Coherent light with wavelength 600nm passes through two very narrow slits and the interference pattern is observed on a screen 3.00 m from the slits. The first order bright fringe is at 4.94 mm from the centre of the central bright fringe. For what wavelength of light will the first order dark fringe be observed at this same point on the screen?

Watch Video Solution

9. Two very narrow slits are spaced 1.80μm apart and are placed 35.0 cm from a screen. What is the distance between the first and second dark lines of the interference pattern when the slits are illuminated with coherent light of $\lambda = 550nm$? (Hint : The angle θ is not small).

Watch Video Solution

10. A narrow beam of 100eV electrons is fired at two parallel slits very close to each other. The distance between the slits is 10Å. The electrons waves after passing through the slits interfere on a screen 3m away from slits and form interference fringes. Find the width of the fringe.

Watch Video Solution

11. In a Young's double slits set up, the wavelength of light used is 546nm. The distance of screen from slits is 1m. The slits separation is 0.3 mm.

(a) Compare the intensity at a point P distant 10mm from the central fringe where the intensity is I_0.

(b) Find the number of bright fringes between P and the central fringe.

Watch Video Solution

12. Interference pattern with Young's double slits 1.5mm apart are formed on a screen at a distance 1.5m from the plane of slits. In the path of the beam of one of the slits, a transparent film of 10 micron thickness and of

refractive index 1.6 is interposed while in the path of the beam from the older slit a transparent film of 15 micron thickness and of refractive index 1.2 is interposed. Find the displacement of the fringe patten.

Watch Video Solution

13. In a Young's double slit experiment using monochromatic light, the fringe pattern shifts by a certain distance on the screen when a mica sheet of refractive index 1.6 and thickness 1.964 microns is introduced in the path of one of the interfering waves. The mica sheet is then removed and the distance between the slits and screen is doubled. It is found that the distance between successive maxima now is the same as observed fringe shift upon the introduced of the mica sheet . Calculate the wavelength of the monochromatic light used in the experiment .

Watch Video Solution

14. Interference effects are produced at point P on a screen as a result of direct rays from a 500 nm source and reflected rays from a mirror, as

shown in figure. If the sources is 100m to the left of the screen and 1.00 cm above the mirror, find the distance y (in milimeters) to the first dark band above the mirror.

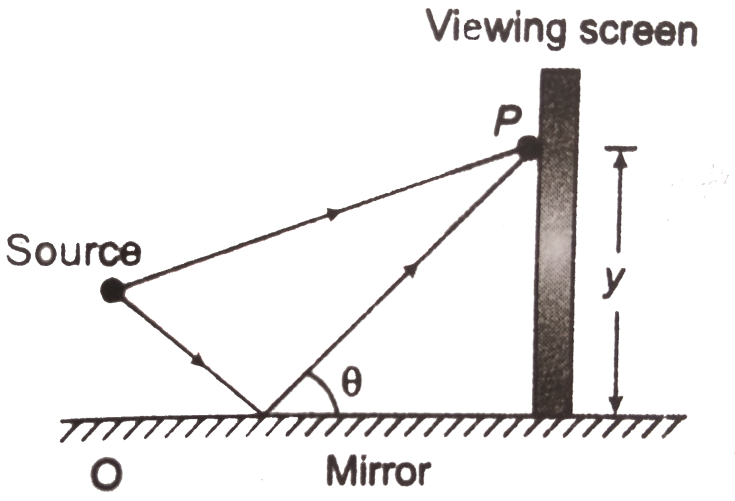

Watch Video Solution

15. What is the thinnest film of coating with n= 1.42 on glass (n=1.52) for which destructive interference of the red component (650 nm) of an incident white light beam in air can take place by reflection ?

Watch Video Solution

16. A glass plate (n=1.53) that is 0.485 μ m thick and surrounded by air is illuminated by a beam of white light normal to the plate.

(a) What wavelengths (in air) within the limits of the visible spectrum $(\lambda = 400 \text{to} 700 nm)$ are intensified in the reflected beam ?

(b) What wavelengths within the visible spectrum are intensified in the transmitted light?

Watch Video Solution

17. A thick glass slab $(\mu = 1.5)$ is to be viewed in reflected white light. It is proposed to coat the slab with a thin layer of a material having refractive index 1.3 so that the wavelength 6000 Å os suppressed. Find the minimum thickness of the coating required.

Watch Video Solution

18. An oil film covers the surface of a small pond. The refractive index of the oil is greater than that of water. At one point on the film, the film has

the smallest non-zero thickness for which there will be destructive interference in the reflected light when infrared radiation with wavelength 800 nm is incident normal to the film. When this film is viewed at normal incidence at this same point, for what visible wavelengths, if any, will there be constructive interference? (Visible light has wavelengths between 400nm and 700 nm)

Watch Video Solution

19. A possible means for making an airplane invisible to radar is to coat the plane with an anti reflective polymer. If radar waves have a wavelength of 3.00 cm and the index of refraction of the polymer is $\mu = 1.5$. How thick is the oil film? Refractive index of the material of airplane wings is greater than the refractive index of polymer.

Watch Video Solution

20. Determine what happens to the double slits interference pattern if one of the slits is covered with a thin, transparent film whose thickness is

$\frac{\lambda}{2(\mu-1)}$, where λ is the wavelength of the incident light and mu is the index of refraction of the film.

Watch Video Solution

21. Two slits 4.0×10^{-6} m apart are illuminated by light of wavelength 600nm . What is the highest order fringe in the interference pattern?

Watch Video Solution

22. Consider an interference experiment using eight equally spaced slits. Determine the smallest phase different in the waves from adjacent slits such that the resultant wave has zero amplitude.

Watch Video Solution

Subjective Questions

1. Two coherent sources A and B of radio waves are 5.00 m apart. Each source emits waves with wavelength 6.00m. Consider points along the line between the two sources. At what distances, if any, from A is the interference (a) constructive (b) destructive?

Watch Video Solution

2. A parallel beam of white light falls on a thin film whose refractive index is equal to $4/3$. The angle of incidence $i = 53^\circ$. What must be the minimum film thickness if the reflected light is to be coloured yellow most intensively? $(\tan 53^\circ = 4/3)$

Watch Video Solution

3. A convergent lens with a focal length of f=10cm is cut into two halves that are then moved apart to a distance of d=0.5 mm (a double lens). Find the fringe width on screen at a distance of 60 cm behind the lens if a

point sources of monochromatic light $(\lambda = 5000\text{Å})$ is placed in front of the lens at a distance of a = 15cm from it.

Watch Video Solution

4. In Young's double-slit experiment, the point source is placed slightly off the central axis shown in Fig. 2.45.(λ=500 nm)

a. Find the nature and order of the interference at point P.

b. Find the nature and order of the interference at point. O.

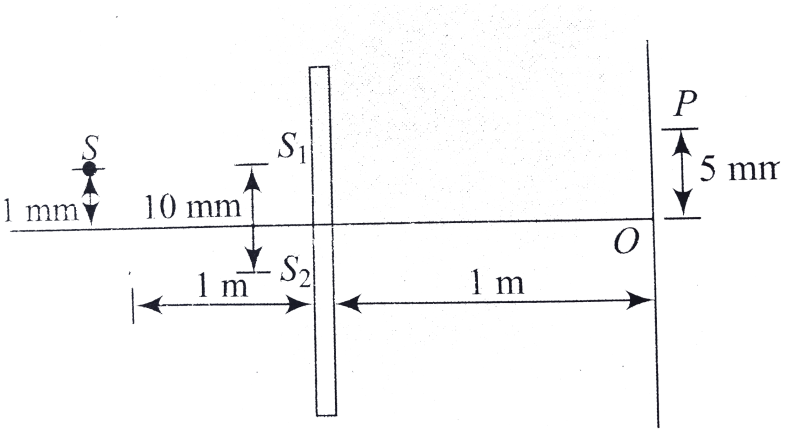

Watch Video Solution

5. YDSE is carried out in a liquid of refractive index $\mu = 1.3$ and a thin film of air is formed in front of the lower slit as shown in the figure. If a maxima of third order is formed at the origin O, find the thickness of the air film. Find the positions of the fourth maxima. The wavelength of light is air is $\lambda_0 = 0.78\mu m$ and $D/d = 1000$.

Watch Video Solution

Level 2 Single Correct

1. The intensity of each of the two slits in Young's double slit experiment is I_0. Calculate the minimum separation between the two points on the screen where intensities are $2I_0$ and I_0. Given, the fringe width equal to β.

A. $\frac{\beta}{4}$

B. $\frac{\beta}{3}$

C. $\frac{\beta}{12}$

D. None of these

Answer: C

Watch Video Solution

2. In Young's double slit experiment, the intensity of light at a point on the screen where path difference is λ is I. If intensity at another point is I/4, then possible path differences at this point are

A. $\frac{\lambda}{3}, \left(\frac{\lambda}{3}\right)$

B. $\frac{\lambda}{3}, \left(2\frac{\lambda}{3}\right)$

C. $\frac{\lambda}{3}, \frac{\lambda}{4}$

D. $(2\lambda)/3, \lambda/4$

Answer: B

Watch Video Solution

3. White light is incident normally on a glass plate (in air) of thickness $500nm$ and refractive index of 1.5. The wavelength (in nm) in the visible region $(400nm - 700nm)$ that is strongly reflected by the plate is:

A. 450

B. 600

C. 400

D. 500

Answer: B

Watch Video Solution

4. A double slit of separation 0.1 mm is illuminated by white light. A coloured interference pattern is formed on a screen 100 cm away. If a pin hole is located in this screen at a distance of 2 mm from the central fringe, the wavelength in the visible spectrum (4000 Å to 7000Å) which will be absent in the light transmitted through the pin hole is (are)

A. 4000 Å

B. 5000Å

C. 6000Å

D. 7000Å

Answer: A

Watch Video Solution

5. In a YDSE experiment, d = 1mm, λ= 6000Å and D= 1m. The minimum distance between two points on screen having 75% intensity of the maximum intensity will be

A. 0.50 mm

B. 0.40 mm

C. 0.30 mm

D. 0.20 mm

Answer: D

Watch Video Solution

6. The central fringe of the interference pattern produced by the light of wavelength 6000 Å is found to shift to the position of 4th dark fringe after a glass sheet of refractive index 1.5 is introduced. The thickness of glass sheet would be

A. $4.8\mu m$

B. $4.2\mu m$

C. $5.4\mu m$

D. $3.0\mu m$

Answer: B

Watch Video Solution

7. Let S_1 and S_2 be the two slits in Young's double slit experiment. If central maxima is observed at P and angle $S_1PS_2 = \theta$, (θ is small) find the y-coordinates of the 3rd minima assuming the origin at the central maxima. (λ = wavelength of monochromatic light used).`

A. $\pm \frac{2\lambda}{\theta}$

B. $\pm \frac{5\lambda}{2\theta}$

C. $\pm \frac{5}{2}\lambda\theta$

D. $\pm 2\lambda\theta$

Answer: B

Watch Video Solution

8. The ratio of the intensity at the cnetre of a bright fringe to the intensity at a point one quarter of the fringe width from the centre is

A. 1

B. $\frac{1}{2}$

C. $\frac{3}{4}$

D. $\frac{1}{4}$

Answer: B

Watch Video Solution

9. In YDSE if a slab whose refractive index can be varied is placed in front of one of the slits. Then, the variation of resultant intensity at mid-point of screen with μ will be best represented by `(mu is greater than or equal to 1)

A.

B.

C.

D.

Answer: C

Watch Video Solution

10. In YDSE, both slits produce equal intensities on the screen. A 100% transparent thin film is placed in front of one of the slits. Now, the intensity on the centre becomes 75% of the previous intensity. The wavelength of light is 6000Å and refractive index of glass is 1.5. Thus, minimum thickness of the glass slab is

A. $0.2\mu m$

B. $0.3\mu m$

C. $0.4\mu m$

D. $0.5\mu m$

Answer: A

Watch Video Solution

11. YDSE is carried with two thin sheets of thickness 10.4μ m each and refractive index $\mu_1 = 1.52$ and $\mu_2 = 1.40$ covering the slits S_1 and S_2 respectively. If white light of range 400nm to 780 nm is used, then which wavelength will form maxima exactly at point O, the centre of the screen

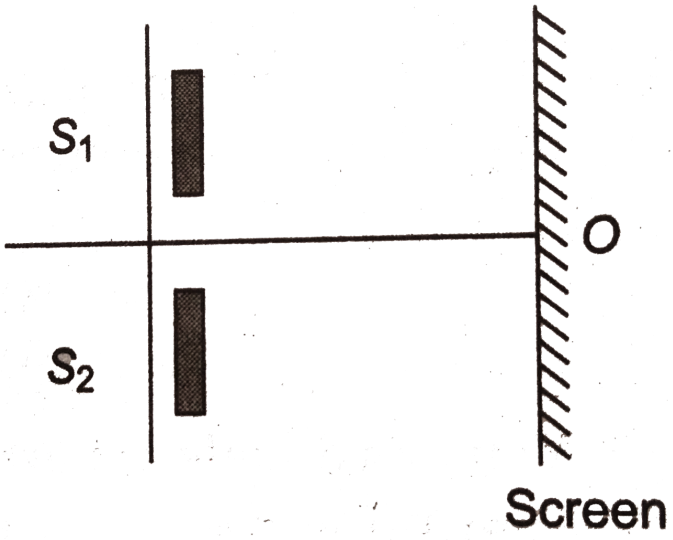

A. (a) 416 nm only

B. (b) 624 nm only

C. (c)416 nm and 624nm only

D. None of these

Answer: C

Watch Video Solution

Level 2 Single Correct Option

1. Two monochromatic (wavelength = a/5) and coherent sources of electromagnetic waves are placed on the x-axis at the points (2a,0) and (-a,0). A detector moves in a circle of radius R(gtgt2a) whose centre is at the origin. The number of maxima detected during one circular revolution by the detector are

A. 60

B. 15

C. 64

D. None of these

Answer: A

Watch Video Solution

Level 2 More Than One Correct

1. A Young's double slit experiment is performed with white light, then

A. the fringe next to the central will be red

B. the central fringe will be white

C. the fringe next to the central will be violet

D. there will not be a completely dark fringe

Answer: B::C::D

Watch Video Solution

2. If one of the slit of a standard Young's double slit experiment is covered by a thin parallel sided glass slab so that it transmits only one-half the light intensity of the other, then

A. the fringe pattern will get shifted towards the covered slit

B. the fringe pattern will get shifted away from the covered slit

C. the bright fringes will be less bright and the dark ones will be more bright

D. the fringe width will remain unchanged.

Answer: A::C::D

Watch Video Solution

3. A parallel beam of light $(\lambda = 5000\text{Å})$ is incident at an angle $\theta = 30^\circ$ with the normal to the slit plane in a Young's double slit experiment. The intensity due to each slit is I_0. Point O is equidistant from S_1 and S_2. The

distance between slits is 1mm.

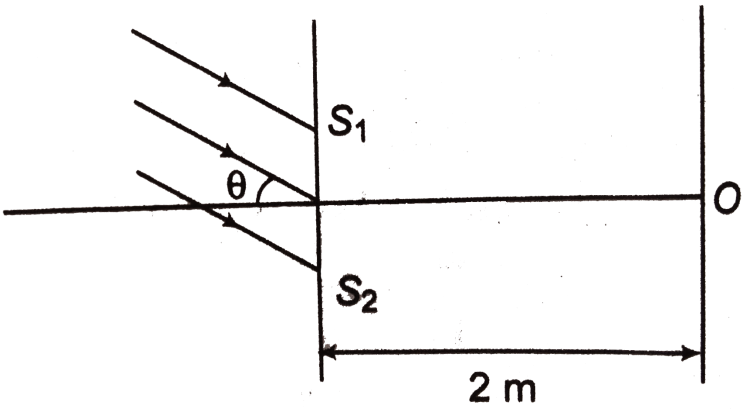

A. the intensity at P is $4I_0$.

B. The intensity at O is zero.

C. The intensity at a point on the screen 4mm above O is $4I_0$.

D. The intensity at a point on the screen 4 mm above O is zero.

Answer: A::C

Watch Video Solution

4. In the phenomenon of interference,

A. sources must be coherent

B. amplitudes must be same

C. wavelengths must be same

D. intensities may be different

Answer: A::C::D

Watch Video Solution

5. YDSE set up shown in figure.

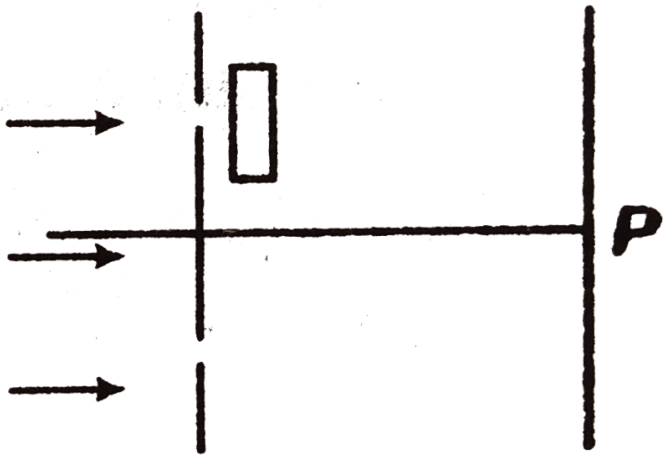

A. zero order maxima will lie above point P

B. first order maxima may lie above point P

C. first order maxima may lie below point P

D. zero order maxima may lie at point P

Answer: A::B::C

Watch Video Solution

6. Bichromatic light of wavelengths $\lambda_1 = 5000\text{Å}$ and $\lambda_2 = 7000\text{Å}$ are used in YDSE. Then,

A. 14th order maxima of λ_1 will coincide with 10th order maxima of λ_2

B. 14th order maxima of λ_1 will coincide with 10th order maxima of λ_2

C. 11th order minima of $\lambda_1 willco \in cidewith8th$ or der $\min imaof$ lambda_2`

D. 14th order maxima of λ_1 will coincide with 10th order maxima of λ_2

Answer: A::C

Watch Video Solution

Level 2 Comprehensionn Based

1. A young's double slit apparatus is immersed in a liquid of refractive index 1.33.It has slit separation of 1 mm and interference pattern is observed on the screen at a distance 1.33 m from plane of slits.The wavelength in air is 6300Å

Calculate the fringe width.

A. 0.63 mm

B. 1.26mm

C. 1.67mm

D. 2.2mm

Answer: A

Watch Video Solution

Watch Video Solution

2. A young's double slit apparatus is immersed in a liquid of refractive index 1.33.It has slit separation of 1 mm and interference pattern is observed on the screen at a distance 1.33 m from plane of slits.The wavelength in air is 6300Å

Find the distance of seventh bright fringe from third bright fringe lying on the same side of central bright fringe.

A. 2.52 mm

B. 4.41 mm

C. 1.89 mm

D. 1.26 mm

Answer: A

Watch Video Solution

3. A young's double slit apporatus is immersed in a liquid of refractive index 1.33.It has slit separation of 1 mm and interference pattern is observed on the screen at a distance 1.33 m from plane of slits.The wavelength in air is 6300Å

One of the slits of the apparatus is covered by a thin glass sheet of refractive index 1.53. Find the smallest thickness of the sheet to interchange the position of minima and maxima .

A. 2.57 mm

B. 1.57 mm

C. 3.27 mm

D. 4.18 mm

Answer: B

Watch Video Solution

4. A young's double slit apparatus is immersed in a liquid of refractive index 1.33.It has slit separation of 1 mm and interference pattern is observed on the screen at a distance 1.33 m from plane of slits.The wavelength in air is 6300Å

One of the slits of the apparatus is covered by a thin glass sheet of refractive index 1.53. Find the fringe width

A. 0.63 mm

B. 1.26 mm

C. 1.67 mm

D. 2.2 mm

Answer: A

Watch Video Solution

Level 2 Subjective

1. A ray of light is incident on the left vertical face of the glass slab. If the incident light has an intensity I and on each reflection the intensity decreases by 90% and on each refraction the intensity decreases by 10%, find the ratio of the intensities of maximum to minimum in reflected

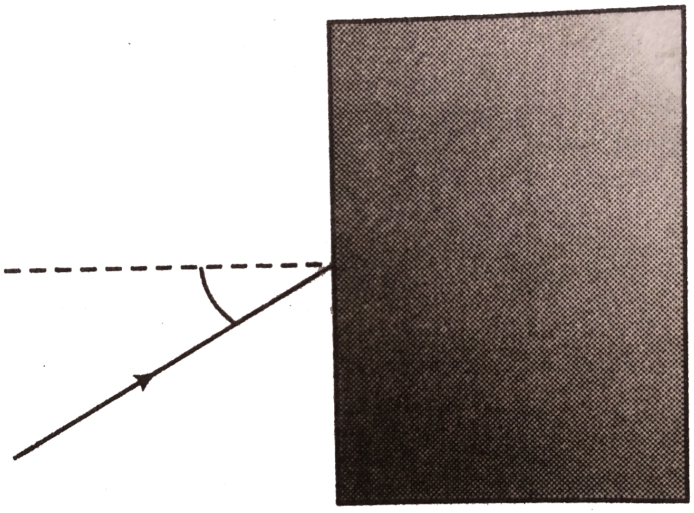

pattern.

Watch Video Solution

2. Two coherent radio point sources that are separated by 2.0 m are radiating in phase with a wavelength of 0.25m. If a detector moves in a

large circle around their mid-point. At how many points will the detector show a maximum signal?

Watch Video Solution

3. In the figure shown, a screen is placed normal to the line joining the two point coherent sources S_1 and S_2. The interference pattern consists of concentric circles.

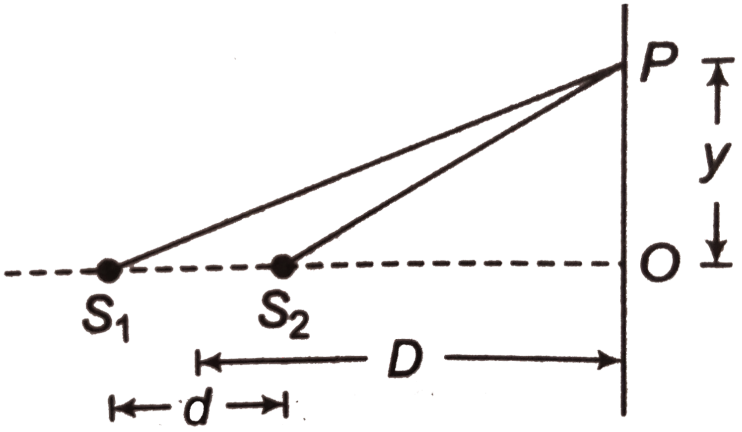

(a)Find the radius of the nth bright ring.

(b) If d=0.5 mm, $\lambda = 5000\text{Å}$ and D=100 cm, find the radius of the closest second bright ring.

(c) Also, find the value of n for this ring.

Watch Video Solution

4. Light of wavelength$\lambda = 500nm$ falls on two narrow slits placed a distance d = 50×10^{-4} cm

apart, at an angle $\phi = 30^{\circ}$ relative to the slits as shown in figure. On the lower slit a transparent slab of thickness 0.1 mm and refractive index $\frac{3}{2}$ is placed. The interference pattern is observed at a distance D=2m from the slits. Then, calculate

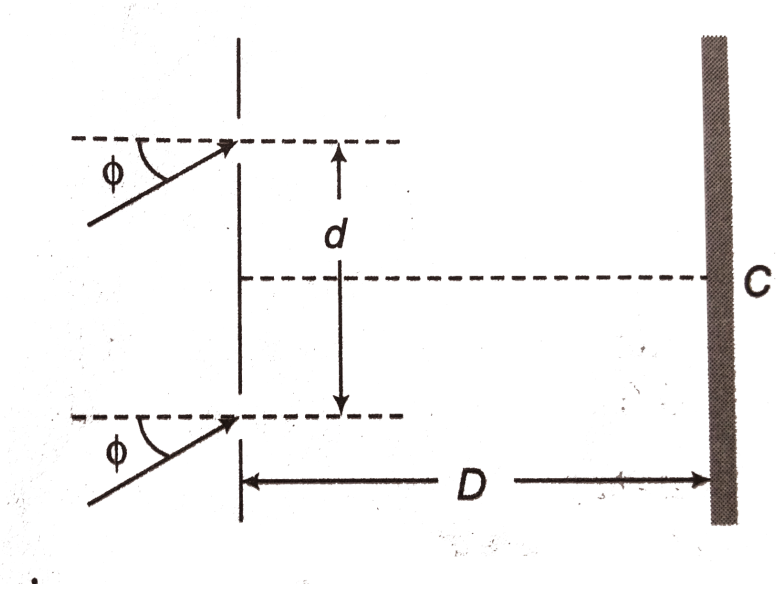

(a) position of the central maxima.

(b) the order of maxima at point C of screen .

(c)how many fringes will pass C, if we remove the transparent slab from the lower slit?

Watch Video Solution

5. In the YDSE, the monochromatic source of wavelength λ is placed at a distance $\frac{d}{2}$ from the central axis (as shown in the figure), where d is the separation between the two slits S_1 and S_2 .

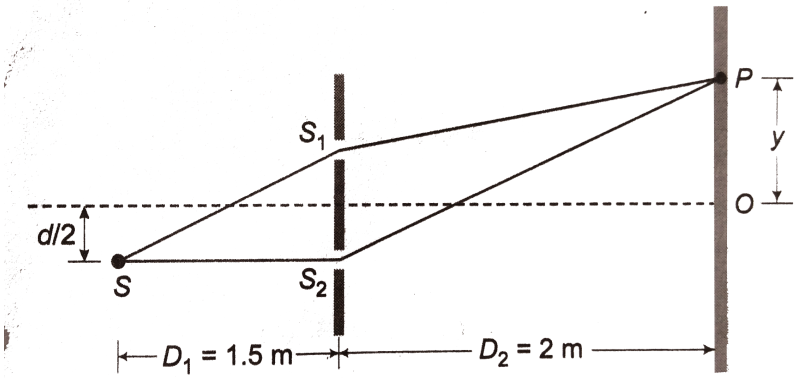

(a)Find the position of the central maxima.

(b) Find the order of interference formed at O.

(c)Now, S is placed on centre dotted line. Find the minimum thickness of the film of refractive indes $\mu = 1.5$ to be placed in front of S_2 so that

intensity at O becomes $\frac{3}{4}$th of the maximum intensity.

(Take $\lambda = 6000\text{Å}, d = 6mm$.)

Watch Video Solution