PHYSICS

BOOKS - DC PANDEY ENGLISH

SEMICONDUCTORS

Example

1. What is the energy band gap of : (i) silicon and (ii)

germanium?

Watch Video Solution

2. In a good conductor, what is the energy gap between the

conduction band and the valence band.?

Watch Video Solution

3. C, Si and Ge have same lattice structure. Why is C insulator while Si and Ge intrinsic semiconductors?

Watch Video Solution

4. In an n- type silicon, which of the following statements is true ?

(a) Electrons are majority carries and trivalent atoms are the dopants.

(b) Electrons are majority carries and pentavalent atoms are the dopants.

(c) Holes are minority carries and paentavalent atoms are the dopants.

(d) Holes are minority carries and trivalent atoms are the dopants.

Watch Video Solution

5. Which of the statements given in above example is true for p - type semiconductors ?

Watch Video Solution

6. Can we take one slab of p - type semiconductor and physically

join it to another n - type semiconductor to get p - n junction?

Watch Video Solution

7. Find the current passing through 2Ω and 4Ω resistance in the circuit shown in figure.

View Text Solution

8. In half-wave rectification, what is the output frequency if the input frequency is 50 Hz. What is the output frequency of a full-wave rectifier for the same input frequency.

Watch Video Solution

9. In figure the input is across the terminals A and C and the output is across B and D. Then the output is

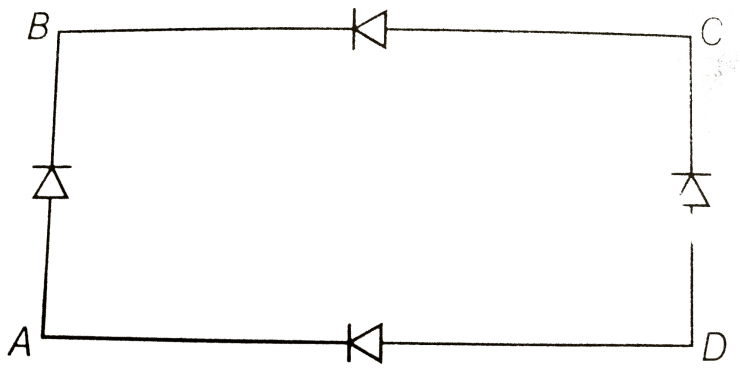

Watch Video Solution

10. In a Zener regulated power supply a Zener diode with $V_Z = 6.0$ V is used for regulation.

The load current is to be 4.0 mA and the unregulated input is 10.0 V. What should be the value of series resistor R_S?

Watch Video Solution

11. The current in the forward bias is known to be more (-mA) than the current in the reverse bias $(-\mu A)$. What is the reason, then, to operate the photodiode in reverse bias ?

Watch Video Solution

12. The current gain of a transistor in a common base

arrangement in 0.98 . Find the change in collector current corresponding to a

change of 5.0 mA in emitter current . What would be the change in base current?

Watch Video Solution

13. A transistor is connected in a common emitter configuration.

The collector supply is 8 V and the voltage drop

across a resistor of 800Ω in

the collector circuit is 0.5 V. If the current gain

factor (α) is 0.96 , Find the base

current.

Watch Video Solution

14. In a common emitter amplifier , the load resistance of the output circuit is 500 times the resistance of the input circuit. If $\alpha = 0.98$, then find the voltage gain and power gain .

Watch Video Solution

Solved Example

1. Sn, C, Si and Ge are all group XIV elements . Yet , Sn is a conductor , C is an insulator while Si and Ge are semiconductors . Why?

Watch Video Solution

2. Three photo diodes $D_1, D_2,$ and D_3 are made of semiconductors having band gap of 2.5 eV, 2 eV and 3 eV, respectively. Which one will be able to detect light of wavelength 6000 Å ?

Watch Video Solution

3. What is the range of energy gap (E_g) in insulators , semiconductors and conductors ?

Watch Video Solution

4. n - type extrinsic semiconductors is negatively charged , while P - type extrinsic semiconductors is positively charged . Is this statement true or false?

Watch Video Solution

Watch Video Solution

5. What is the resistance of an intrinsic semiconductor at 0K?

Watch Video Solution

6. Consider an amplifier circuit using a transistor.The output power is several times greater than the input power.Where does the extra power come from?

Watch Video Solution

7. A piece of copper and the other of geramnium are cooled from the room temperature to 80K . What will happen to their resistance ?

Watch Video Solution

8. A transistor has three impurity regions , emitter , base and collector. Arrange them in order of increasing doping levels.

Watch Video Solution

9. Name two gates which can be used repeatedly to produce all the basic or complsicated gates.

Watch Video Solution

10. A change of 8.0 mA in the emitter current brings a change of 7.9mA in the collector current. How much change in the base current is required to have the same change 7.9 mA in

the collector current? Find the values of α and β.

Watch Video Solution

11. A transistor is used in common-emitter mode in an amplifier circuit. When a signal 20mV is added to the base-emmiter voltage,the base current changes by $20(\mu)A$and the collector current changes by 2mA.The load resistance is $5k(\Omega)$.Calculate (a)the factor(β) (b)the input resistance R_{BE}, (c) the transconductance and (d) the voltage gain .

Watch Video Solution

12. An n - p- n transistor is connected in common - emitter configuraration in which collector supply is 8 V and the voltage drop across the load resistance of 800Ω connected in the collector circuit is 0.8 V . If current amplification factor is 25 , determine collector - emitter voltage and base current . If the internal resistance of the transistor is 200Ω , calculate the voltage gain and the power gain.

Watch Video Solution

13. An n-p-n transistor in a common - emitter mode is used as a simple voltage amplifier with a collector current of 4 mA. The positive terminal of a 8 V battery is connected to the collector through a load resistance R_L and to the base through a resistance R_B . The collector - emitter voltage $V_{CE} = 4V$, the base - emitter voltage $V_{BE} = 0.6V$ and the current amplification factor $\beta = 100$. Calculate the values of R_L and R_B .

Watch Video Solution

14. Let $X = A.\overline{BC}$. Evaluate X for

(a) $A = 1, B = 0, C = 1,$ (b) A = B = C = 1 and (

c) A = B = C = 0.

Watch Video Solution

Exercise 35 1

1. Carbon , silicon and germanium have four valence elcectrons each . These are characterised by valence and conduction bands

separated by energy band - gap respectively equal to $(E_g)_c (E_g)_{si}$ and $(E_g)_{Ge}$. Which of the following statements ture ?

A. (a) $(E\_g)_{Si} < (E_g)_{Ge} < (E_g)_C$

B. (b) $(E\_g)_C < (E_g)_{Ge} > (E_g)_S i$

C. (c) $(E\_g)_C > (E_g)_{Si} > (E_g)_{Ge}$

D. (d) $(E_g)_C = (E_g)_{Si} = (E_g)_{Ge}$

Answer: C

Watch Video Solution

Exercise 35 2

1. In an unblased p-n junction, holes diffuse from the p - region to n- region because

A. (a) free electrons in the n - region attract them

B. (b) they move across the junction by the potential difference

C. (c) hole concentration in p - region is more as compared to n -region

D. (d) All of the above

Answer: C

Watch Video Solution

2. When a forward bias is applied to a p -n junction. It

A. (a) raises the potential barrier

B. (b) reduces the majority carrier current to zero

C. (c) lowers the potential barrier

D. (d) All of the above

Answer: C

Watch Video Solution

Exercise 35 3

1. For transistor action, which of the following statements is correct?

A. (a) Base , emitter and collector regions should have similar size and doping concentrations

B. (b) The base region must be very thin and lightly doped

C. (c) The emitter junction is forward biased and collector junction is reverse biased

D. (d) Both the emitter junction as well as the collector junction are forward biased

Answer: B::C

Watch Video Solution

2. For a CE- transistor amplifier , the audio signal voltage across the collector resistance of $2k\Omega$ is 2 V . Suppose the current amplifiaction factor of the transistor is 100 . Find the input signal voltage and base current , if the base resistance is $1k\Omega$.

Watch Video Solution

Single Correct

1. The conductivity of a semiconductor increases with increase in temperature because

A. (a) number density of free current carries increases

B. (b) relaxation time increases

C. both number density of carriers and relaxation time decreases but effect of decrease in relaxation time is much less than increase in number density .

D. (d) number density of current carriers increases, relaxation time decreases but effect of decrease in relaxation time is much less than increases in number density

Answer: D

Watch Video Solution

2. In figure, assuming the diodes to be ideal

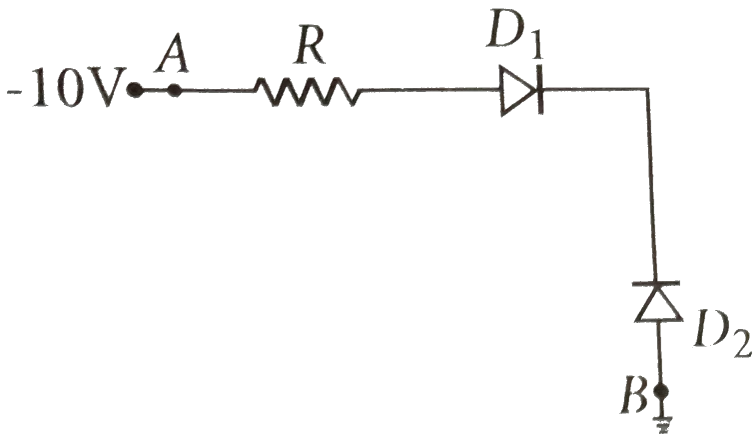

A. (a) D_1 is forward biased and D_2 is reverse biased and hence current flows from A to B.

B. D_2 is forward biased and D_1 is reverse biased and hence no current flows from B

to A and vice - versa.

C. D_1 and D_2 are both forward biased and hence current flows from A to B.

D. D_1 and D_2 are both reverse biased and hence no current flows from A to B and vice versa.

Answer: B

Watch Video Solution

3. Hole is

A. (a) an anti - particle of electron

B. (b) a vacancy created when an electron leaves a covalent bond

C. (c) absence of free electons

D. (d) an artificially created particle

Answer: B

Watch Video Solution

4. A 220 V AC supply is connected between points A and B . What will be the potential difference V across the capacitor ?

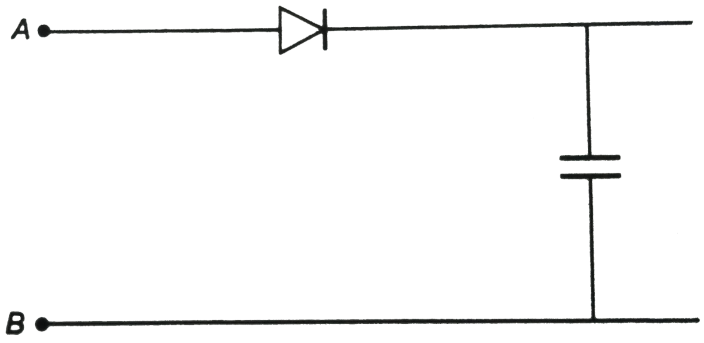

A. (a) 220 V

B. (b) 110 V

C. (c) 0 V

D. $220\sqrt{2}V$

Answer: D

Watch Video Solution

More Than One Correct

1. When an electric field is applied across a semiconductor,

A. (a) electrons move from lower energy level to higher energy level in the conduction band.

B. (b) electrons move from higher energy level to lower energy level in the conduction band.

C. (c) holes in the valence band move from higher energy level to lower energy level.

D. (d) holes in the valence band move from lower energy level to higher energy level.

Answer: A::C

Watch Video Solution

2. Consider an $n-p-n$ transitor with its base-emitter junction forward biased and collector base junction reverse biased. Which of the following statement are true ?

A. (a) Electrons crossover from emiiter to collector .

B. (b) Holes move from base to collector .

C. (c) Electrons move from emitter to base.

D. (d) Electrons from emitter move out of base without going to the collector.

Answer: A::C

Watch Video Solution

3. In an n-p-n transistor circuit , the collector currents is 10mA . If 95 per cent of the electrons emitted reach the collector, which of the following statements are true?

A. (a) The emitter current will be 8 mA.

B. (b) the emitter current will be 10 .53 mA.

C. (c) The base current will be 0.53 mA.

D. (d) The base current will be 2 mA.

Answer: B::C

Watch Video Solution

4. In the depletion region of a diode

A. (a) there are no mobile charges

B. (b) equal number of holes and electrons exists, making the region neutral

C. (c) recombination of holes and electrons has taken palce

D. (d) immobile charged ions exist.

Answer: A::B::C

Watch Video Solution

5. What happens during regualtion action of a Zener diode?

A. (a)The current and voltage across the Zener remains fixed.

B. (b) The current through the series resistance(R) changes.

C. (c) The Zener resistnace is constant .

D. The resistance offered by the Zener changes.

Answer: B::D

Watch Video Solution

6. The breakdown in a reverse biased p-n junction diode is more likely to occur due to

A. (a) large velocity of the minority charge carries if the doping concentration is small

B. (b) large velocity of the minority charge carries if the doping concentration is large

C. (c) strong electric field in a depletion region if the doping concentration is

small

D. (d) strong electric field in a depletion region if the doping concentration is large.

Answer: A::D

Watch Video Solution

Subjective

1. Can the potential barrier across a p-n junction be measured by simply connecting a voltmeter across the junction ?

Watch Video Solution

2. Two car garages have a common gate which needs to open automatically when a car enters either of the garages or cars enter both. Devise a circuit that resembles this situation using diodes for the situation .

Watch Video Solution

3. Two amplifiers are connected one after the other in series (cascaded). The first amplifier has a voltage gain of 10 and the second has a voltage gain of 20 . If the input signal is 0.01 V , calculate the output AC signal .

Watch Video Solution

4. A p-n junction is fabricated from a semiconductor with band gap of $2.8eV$. Can it

detect a wavelength of $6000nm$?

Watch Video Solution

5. (i) Name the type of a diode whose characteristic are shown figure . (ii) What does

the point P in Figure represent?

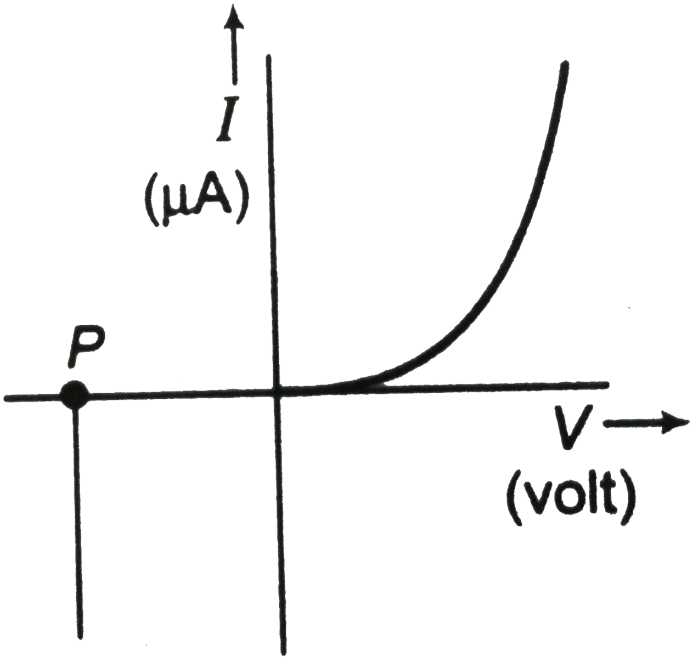

Watch Video Solution

6. If the resistance R_1 is increased , how will the readings of the ammeter and voltmeter

change?

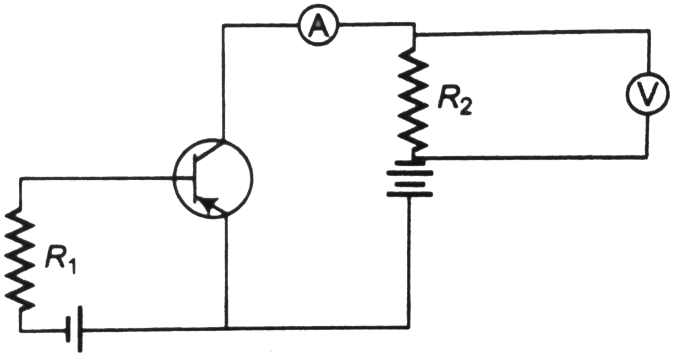

Watch Video Solution

7. How would you set up a circuit to obtain NOT gate using a transistor?

Watch Video Solution

8. A Zener of power rating 1 W is to be used as a voltage regulator. If Zener has a breakdown of 5V and it has to regulate voltage which fluctuated between 3 V and 7 V, what should be the value of R_s for safe operation (see figure) ?

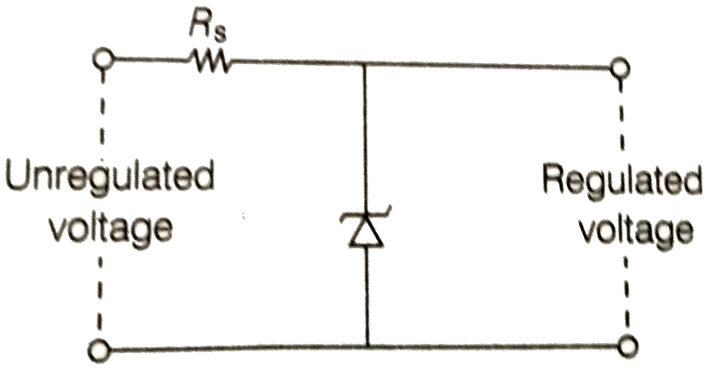

Watch Video Solution

9. If each diode in figure has a forward bias resistance of 25 Omega and infinite resistance in reverse bias, what will be the values of the current I_1, I_2, I_3 and I_4?

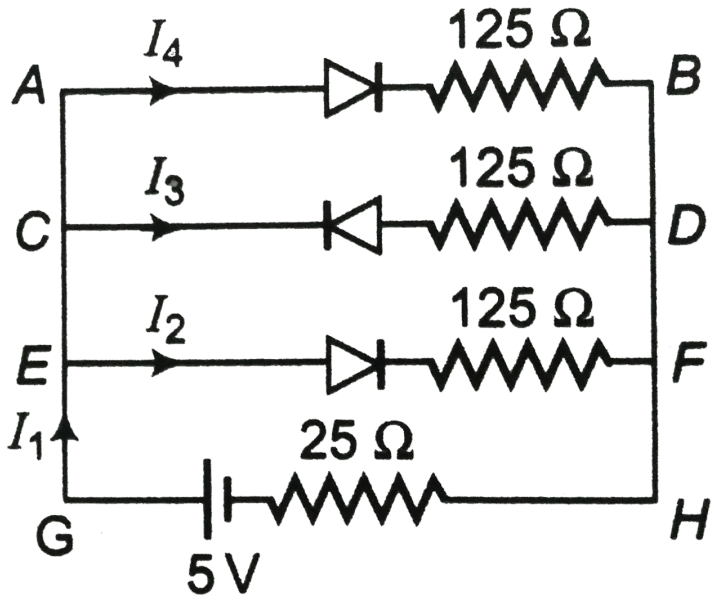

Watch Video Solution

10. In the circuit shown in figure when the input voltage of the base resistance is 10 V . Find the values of I_b, I_c and β .

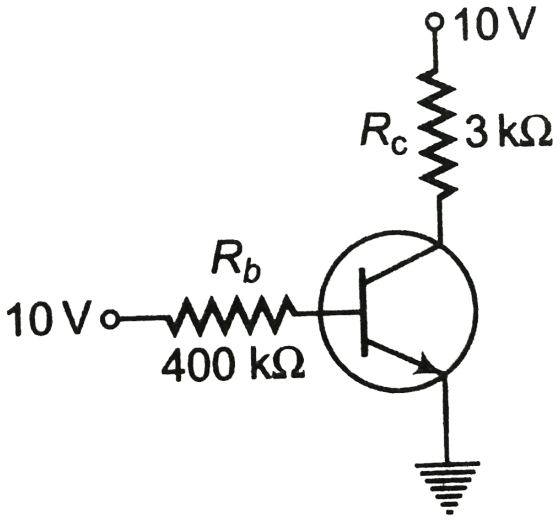

Watch Video Solution

11. For the transistor circuit shown in figure , evaluate V_E, R_B and R_E. Given $I_C = 1mA$, $V_{CE} = 3V$, $V_{BE} = 0.5V$, $V_{\mathbb{C}} = 12V$ and $\beta = 100$

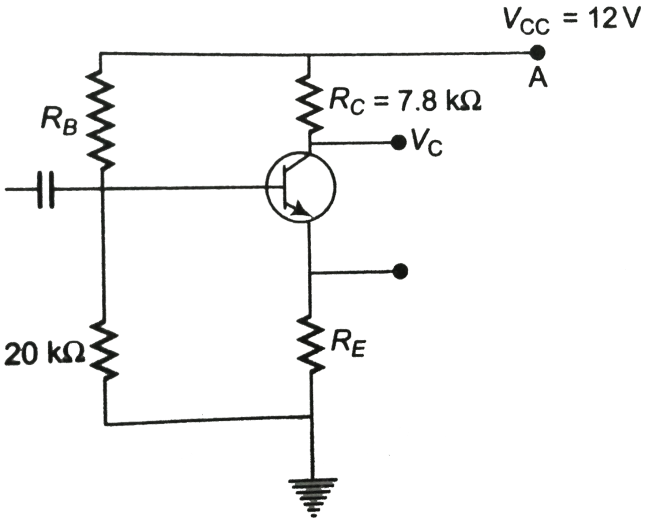

Watch Video Solution

12. In the circuit shown in figure , find the value of R_C.

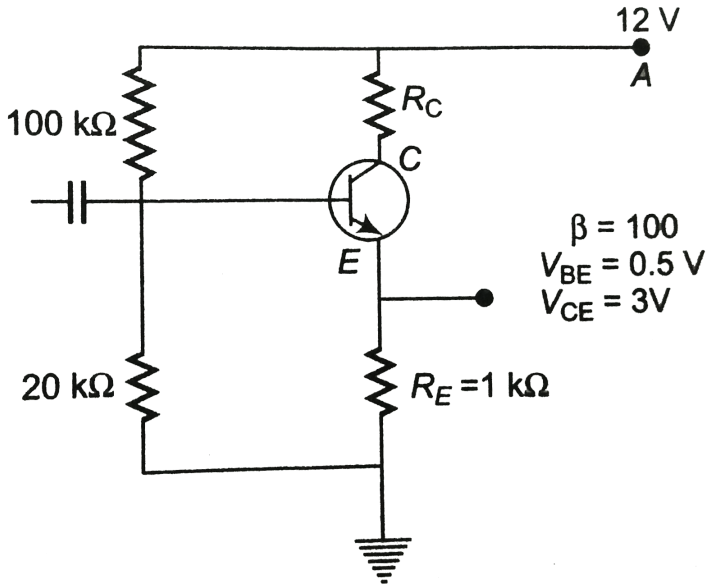

Watch Video Solution