PHYSICS

NTA MOCK TESTS ENGLISH

NTA JEE MOCK TEST 69

Physics

1. The K_α line obtained for molybdenum $(Z = 42)$ is 0.71 Å. Then, the wavelength of the K_α line of copper (Z = 29) is

A. 21.4Å

B. 1.52Å

C. 1.04Å

D. 0.71Å

Answer: B

Watch Video Solution

2. A flat mirror revolves at a constant angular velocity making $n = 0.4$ revolutions per second. With what velocity $\left(\text{in m s}^{-1}\right)$ will a

light spot move along a spherical screen with a radius of 15 m, if the mirror is at the centre of curvature of the screen ?

A. 37.7

B. 60.3

C. 68.7

D. 75.4

Answer: D

Watch Video Solution

3. A copper wire of cross-sectional area $3.00 \times 10^{-6} m^2$ carries a current $10.0A$.

a. Find the drift speed of the electrons in the wire. Assume that each copper atom contributes one free electron to the body of material.

b. Find the average time between collisions for electrons in the copper at $20^\circ C$. The density of copper is $8.95gcm^{-3}$, molar mass of copper is $63.5gmol^{-1}$, Avogadro number is 6.02×10^{23} electrons per mol and resistivity of copper is $1.7 \times 10^{-8} \Omega m$.

A. $0.24\ \mathrm{m\ s^{-1}}$

B. $0.12\ \mathrm{m\ s^{-1}}$

C. $2.4\ \mathrm{m\ s^{-1}}$

D. $0.06\ \mathrm{m\ s^{-1}}$

Answer: B

Watch Video Solution

4. A neutral sphere of radius r and density ρ is placed in a uniform electric field E that exists on the earth's surface in the vertically upward

direction. If atomic number and the mass number of the material of the sphere are Z and A respectively, then the fraction of electrons that should be removed from the sphere for it to remain in equilibrium is [Assume that the sphere is able to hold the necessary charge without any leakage. Here N_A - Avogadro number]

A. $\frac{2g}{eEZAN_A}$

B. $\frac{3gA}{eEN}$

C. $\frac{gA}{eEZN_A}$

D. $\frac{2g.\ A}{eEZN_A}$

Answer: C

Watch Video Solution

5. Two identical satellites are moving around the Earth in circular orbits at heights 3R and R respectively where R is the radius of the Earth. The ratio of their kinetic energies is x. Find x.

A. $2:1$

B. $1:2$

C. $3:1$

D. $2:3$

Answer: B

Watch Video Solution

6. An ideal gas is compressed of half its initial volume by means of several process. Which of the process results in the maximum work done on the gas ?

A. Isobaric

B. Isochoric

C. Isothermal

D. Adiabatic

Answer: D

Watch Video Solution

7. A current I is flowing in a straight conductor of length L. The magnetic induction at a point distant $\frac{L}{4}$ from its centre will be

A. $\frac{\mu_0 I i}{2\pi} \ln 2$

B. $\frac{\mu_0 I i}{2\pi} \ln 3$

C. $\frac{3\mu_0 I i}{2\pi}$

D. $\frac{2\mu_0 I i}{3\pi}$

Answer: B

Watch Video Solution

8. A ball is projected from the ground at angle θ with the horizontal. After $1s$, it is moving at angle 45° with the horizontal and after $2s$ it is

moving horizontally. What is the velocity of projection of the ball ?

A. $10\sqrt{3}ms^{-1}$

B. $20\sqrt{3}ms^{-1}$

C. $10\sqrt{5}ms^{-1}$

D. $20\sqrt{2}ms^{-1}$

Answer: C

Watch Video Solution

9. A 2000 kg rocket in free space expels 0.5 kg of gas per second at exhaust velocity $400\ \mathrm{m\ s}^{-1}$ for 5 s. The increase in the speed of the rocket in this time is

A. $2000ms^{-1}$

B. $200ms^{-1}$

C. $0.5ms^{-1}$

D. zero

Answer: C

Watch Video Solution

Watch Video Solution

10. m_p denotes the mass of a proton and m_n that of a neutron. A given nucleus of binding energy BE, contains Z protons and N neutrons. The mass $m(N, Z)$ of the nucleus is given by

A. $M(N, Z) = NM_n + ZM_p - Bc^2$

B. $M(N, Z) = NM_n + ZN_p + Bc^2$

C. $M(N, Z) = NM_n + ZM_p - B/c^2$

D. $M(N, Z) = NM_n + ZM_p + B/c^2$

Answer: C

Watch Video Solution

11. A body of mass 'm' hangs from three springs, each of spring constant 'k' as shown in the figure. If the mass is slightly displaced and let go, the system will oscillate with time

period–

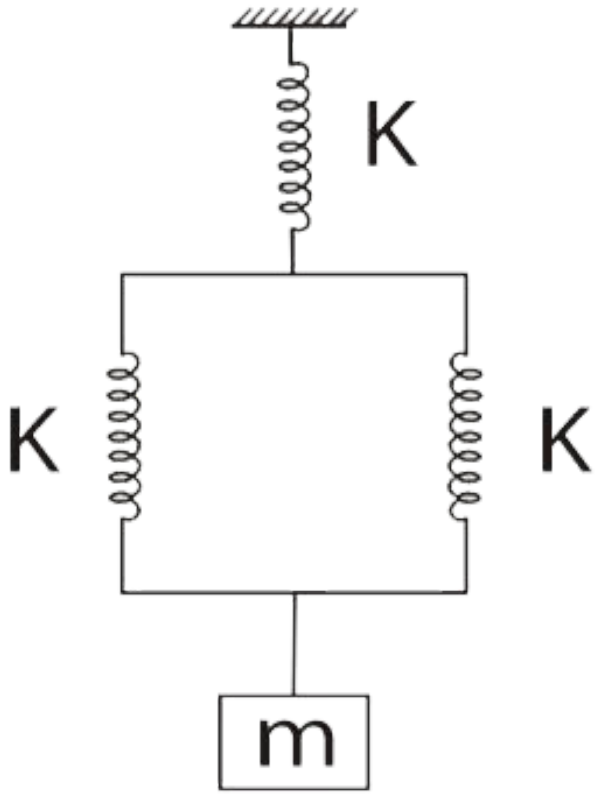

A. $2\pi\sqrt{\frac{m}{3k}}$

B. $2\pi\sqrt{\frac{3m}{2k}}$

C. $2\pi\sqrt{\frac{2m}{3k}}$

D. $2\pi\sqrt{\frac{3k}{m}}$

Answer: B

Watch Video Solution

12. For certain metal incident frequency ν is five times threshold frequency ν_0 and the maximum velocity of the photoelectrons is $8 \times 10^6 ms^{-1}$. If incident photon frequency is $2\nu_0$, the maximum velocity of photoelectrons will be

A. $4 \times 10^6 ms^{-1}$

B. $6 \times 10^6 ms^{-1}$

C. $8 \times 10^6 ms^{-1}$

D. $1 \times 10^6 ms^{-1}$

Answer: A

Watch Video Solution

13. The radius R of the soap bubble is doubled under isothermal condition. If T be the surface

tension of soap bubble. The work done in doing so it given by

A. $32\pi R^2 T$

B. $24\pi R^2 T$

C. $8\pi R^2 T$

D. $4\pi R^2 T$

Answer: B

Watch Video Solution

14. From a disc of radius R, a concentric circular portion of radius r is cut out so as to leave an annular disc of mass M. The moment of inertia of this annular disc about the axis perpendicular to its plane and passing through its centre of gravity is

A. $\frac{1}{2}M(R^2 + r^2)$

B. $\frac{1}{2}M(R^2 - r^2)$

C. $\frac{1}{2}M(R^4 + r^4)$

D. $\frac{1}{2}M'(R^4 - r^4)$

Answer: A

Watch Video Solution

15. A transistor oscillator is

(i) An amplifier with positive feedback

(ii) An amplifier with reduced gain

(iii) The one in which DC supply energy is converted into AC output energy. Then

A. All (i), (ii) and (iii) are correct

B. (i) and (ii) are correct

C. (i) and (iii) are correct

D. (ii) and (iii) are correct

Answer: C

Watch Video Solution

16. A cylinder closed at both ends is separated into two equal parts (45 cm each) by a piston impermeable to heat. Both the parts contain the same masses of gas at a temperature of 300 K and a pressure of 1 atm. If now the gas

in one of parts is heated such that the piston shifts by 5 cm, then the temperature and the pressure of the gas in this part after heating is

A. T = 365 K and P = 1.125 atm

B. T = 350 K and P = 1.125 atm

C. T= 375 K and P = 2.125 atm

D. T = 375 K and P = 1.125 atm

Answer: D

Watch Video Solution

17. The dimensional formula for areal velocity is

A. $[M^0L^{-2}T]$

B. $[M^0L^{-2}T^{-1}]$

C. $[M^0L^2T^{-1}]$

D. $[M^0L^2T]$

Answer: C

Watch Video Solution

18. Consider two polaroids A and B as shown. Unpolarised right is incident on polaroid A. Now, both the polaroids are rotated simultaneoulsy by 180° in the same sense of rotation such that at energy instant, their pass (transmission) axes always remain parallel to each other. During the rotation, intensity of transmitted light through

polaroid B

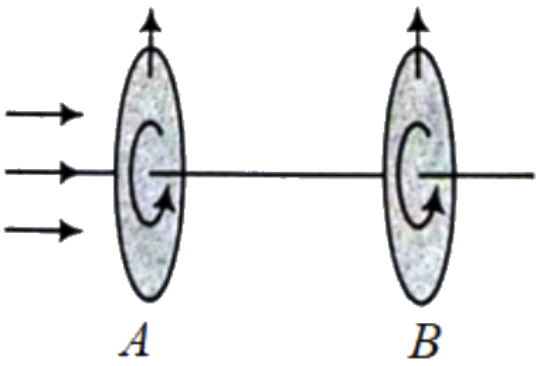

A. (a)increases continuously

B. (b)first increases then decreases

C. (c)remains same

D. (d)decreases continuously

Answer: C

Watch Video Solution

19. The instantaneous displacement of a simple pendulum oscillator is given by $x = A\cos\left(\omega t + \frac{\pi}{4}\right)$ Its speed will be maximum at time

A. $\frac{2\pi}{\omega}$

B. $\frac{\omega}{2\pi}$

C. $\frac{\omega}{\pi}$

D. $\frac{\pi}{4\omega}$

Answer: D

Watch Video Solution

20. If $W_1 W_2$ and W_3 represent the work done in moving a particle from A to B along three different paths 1.2 and3 respectively (asshown) in the gravitational fieled of a point mass m, find the correct relation between W_(1) W_(2)

and W_(3)`

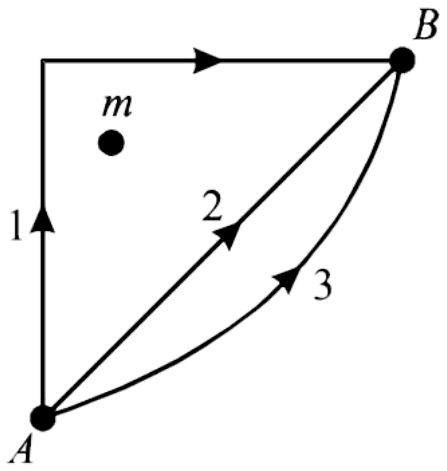

A. $W_1 > W_2 > W_3$

B. $W_1 = W_2 = W_3$

C. $W_1 < W_2 < W_3$

D. $W_2 > W_1 > W_3$

Answer: B

Watch Video Solution

21. A machine gun has a mass 5kg. It fires 50 gram bullets at the rate of 30 bullets per minute at a speed of $40ms^{-1}$. What force is required to keep the gun in position ?

Watch Video Solution

22. An AC e.m.f $E = 4\cos 1000tV$ is applied to an LR circuit containing inductance 3 mH and resistance 4Ω. The amplitude of the current is

Watch Video Solution

23. A particle moves according to the law $x = a\cos$(pi)/(2)` The distance covered by it in the time interval between t=0 to t=3s is

Watch Video Solution

24. A uniform copper rod 50 cm long is insulated on the sides, and has its ends exposedto ice and steam,respectively. If there

is a layer of water 1 mm thick at each end, calculate the temperature gradient in the bar. The thermal conductivity of copper is $436Wm^{-1}K^{-1}$ and that of water is $0.436Wm^{-1}K^{-1}$.

Watch Video Solution

25. If the distance between the virtual image from Its real object is 60 cm in case of a concave mirror . The focal length of the

concave mirror If the image formed is 3 times magnified image is

Watch Video Solution